9/26/2021 4:21:13 PM

0 5' 25'
Scale 1/8" = 1'-0"

0 1' 12'
Scale

GENERAL NOTES

FIRE SPRINKLER LAYOUT DESIGNED IN ACCORDANCE WITH NFPA 13 (2016), CFC/CBC (2016), CITY OF FRESNO FIRE PREVENTION. ALL WORK TO BE DONE IN ACCORDANCE WITH THESE PLANS AND ALL NATIONAL, STATE, AND LOCAL CODES.

THESE DRAWINGS ARE SCHEMATIC IN NATURE, AND ARE NOT INTENDED TO REFLECT FINAL, COORDINATED (AMONGST OTHER TRADES), INSTALLATION PLANS. THESE DRAWINGS ARE FOR BID REFERENCE ONLY. IT IS THE RESPONSIBILITY OF THE CONTRACTOR TO FURNISH AND INSTALL ALL ITEMS REQUIRED FOR A COMPLETE ACCEPTABLE WORKING INSTALLATION, WHETHER SHOWN OR NOT SHOWN, APPLICABLE TO ALL CITED CODES AND STANDARDS. IT SHALL BE THE RESPONSIBILITY OF THE SPRINKLER INSTALLATION CONTRACTOR TO COORDINATE WITH ALL TRADES. IT IS THE SPRINKLER INSTALLATION CONTRACTOR TO OBTAIN A PERMIT THROUGH CITY OF FRESNO FIRE PREVENTION.

CONTRACTOR TO REVIEW FOR BID, SCHEMATIC "FOR REFERENCE" PLANS AS DESIGNED BY ENGINEER. AFTER AWARD OF BID, ALL DEVIATIONS FROM THE ORIGINAL DESIGN INTENTION SHALL BE CLOUDED AND NOTED ON THE CONTRACTOR ISSUED SHOP DRAWINGS TO ENGINEER, WHICH HAVE BEEN COORDINATED AMONGST THE TRADES, FOR REVIEW AND APPROVAL BY ENGINEER BEFORE SUBMITTAL TO CITY OF FRESNO FIRE PREVENTION.

GENERAL CONTRACTOR IS SOLELY RESPONSIBLE FOR INSURING ALL SUB-CONTRACTORS COORDINATE SHOP DRAWINGS PRIOR TO ORDERING OR INSTALLATION OF ANY EQUIPMENT, DEVICE, MATERIAL, ETC. SUBMISSION OF SHOP DRAWINGS TO THE ENGINEER CONSTITUTES THAT THE DRAWINGS SUBMITTED HAVE BEEN COORDINATED AMONGST THE TRADES. FAILURE TO COORDINATE ALL SHOP DRAWINGS AMONGST THE TRADES, FOR REVIEW AND APPROVAL BY THE ENGINEER, WILL NOT CONSTITUTE A CHANGE ORDER TO THE OWNER, FOR UNIDENTIFIED FIELD COORDINATION ISSUES.

ANY DESIGN REVISIONS OR DEVIATIONS THAT ARISE FROM COORDINATION OF INSTALLATION MEANS AND METHODS AMONGST THE TRADES DURING CONSTRUCTION, SHALL BE PROVIDED TO THE ARCHITECT BY RFI, DETAILING COORDINATION ISSUE AND PROPOSED SOLUTION. ONCE REVIEWED AND APPROVED BY ENGINEER, THE DESIGN REVISIONS OR DEVIATIONS SHALL BE COORDINATED IN THE FIELD AMONGST THE IMPACTED TRADES, AND SHOWN ON THE ADDENDUM TO CITY OF FRESNO FIRE PREVENTION. A COMPLETE ACCURATE SET OF AS-BUILTS SHALL BE MAINTAINED ON SITE DURING CONSTRUCTION PER FFD 405 POLICY, AND ARE TO BE ISSUED TO ARCHITECT AND ENGINEER UPON COMPLETION, INSPECTION, AND TESTING OF INSTALLATION.

CONTRACTOR TO PROVIDE ONE (1) HARD COPY AND ELECTRIC SET OF THE FOLLOWING:

A. FULLY COORDINATED AMONGST THE TRADES INSTALLATION SHOP DRAWINGS INCLUDING ALL PIPE CUT LENGTHS, FITTINGS, HANGERS, SPRINKLERS WITH LEGEND, HYDRAULIC CALCULATIONS AND PRODUCT SUBMITTAL.
B. BOUND SUBMITTAL TO INCLUDE COVER PAGE, TABLE OF CONTENTS, PIPING, HARDWARE, AND MATERIALS (INCLUDING FIRE STOPPING). COVER PAGE TO INCLUDE PROJECT NAME, SPRINKLER CONTRACTOR, GENERAL CONTRACTOR, ARCHITECT, AND DATE SUBMITTED FOR REVIEW. ELECTRONIC SUBMITTAL TO THE ENGINEER SHALL BE BOOKMARKED.

ALL ITEMS REQUIRED BY NFPA 13 (2016) CHAPTER 23 (FOR WORKING DRAWINGS) AND FFD 405 POLICY SHALL BE PROVIDED ON THE SHOP DRAWINGS. SUBMITTALS ARE IN ADDITION TO, AND NOT IN LIEU OF, THIS REQUIREMENT.

FINAL INSTALLATION SPACING FOR SPRINKLER SYSTEM PIPING AND SPRINKLERS, MAY VARY WITH FIELD COORDINATION ISSUES, ALL DEVIATIONS TO COMPLY WITH SPRINKLER LISTINGS, NFPA 13 (2016), CFC/CBC (2016), AND CITY OF FRESNO FIRE PREVENTION.

SPRINKLERS ARE TO BE LOCATED CENTER OF ALL ACOUSTIC CEILING TILES (1' X 1', 2' X 1') WHERE APPLICABLE. SPRINKLERS IN HARD LID CEILINGS SHALL LINE UP WITH OTHER DISCIPLINE WHERE APPLICABLE.

LOCATION OF HANGERS ARE SCHEMATIC IN NATURE AND INTENDED TO SHOW APPROXIMATE LOCATIONS. INSTALLING SPRINKLER CONTRACTOR SHALL BE RESPONSIBLE FOR INSTALLING HANGERS PER NFPA 13 (2016) TABLE 9.2.2.1(a).

SUBMIT PLANS TO AND OBTAIN PERMIT FROM THE FIRE PREVENTION DIVISION FOR THE INSTALLATION OR MODIFICATION OF FIRE SPRINKLER SYSTEM. INSTALLATION MUST ALSO COMPLY WITH FFD POLICY SECTION 405. FFD POLICIES CAN BE FOUND AT: HTTPS://WWW.FRESNO.GOV/FIRE-TRAINING/MANUALS-AND-FORMS/.

1

Jory Rothenfluh

From: Justin Ileal <Justin.Beal@fresno.gov>
Sent: Monday, December 20, 2021 4:19 PM
To: Jory Rothenfluh
Subject: RE: 1221 Fulton St. Flow Curve - FFD Occ. #20106

Hi Jory,

Here is the data for 1221 Fulton:

This location has an existing 6" fire service fed from the 12" main in the alley. Curve is COF prescriptive curve "A" (45s, 35r @ 1800 gpm).

Source to the DC is 10' from the alley...

DC loss should be shown as actual.

DC to BOR should be shown as actual pipe I.D., C-factor and fittings.

As a side note, if the riser is in the alley (and outside), you will need to include on your plans an approved bollard detail, FDC detail, etc. both of which must show compliant access, as well as proper vehicle impact protection for the equipment as a condition of issuance of a new permit. FFD will verify these requirements on field inspection and will hold permit final and occupancy until these requirements are met...You may also want to let the UG contractor know that the Water Division no longer allows riser mounted detector checks, so they must now install the DC to Public Works Std. W-16 & 17 and it must be in a traffic rated box, with a traffic rated lid.

Please include a copy of this email when submitting your plans.

Have a great day!

JB

Justin H. Beal, MPA, EFO, FM, FO, CFPS
Fire Prevention Engineer
Prevention, Support, and Technical Services Division
Fresno Fire Department
911 H Street
Fresno, CA 93721
(559) 621-4181/FAX (559) 498-4323
Work Schedule: Monday – Thursday *(COVID MODIFIED – Remote Work Tuesdays & Wednesdays)*
Est. Plan Check Turnaround Time for All Plans: *30 - 45 business days (updated 09-01-21)*
justin.beal@fresno.gov

Note: Email responses may take up to one week to be returned. Email responses are considered informal replies to informal questions; are not considered binding, and are provided only as informal guidance as related to codes, building standards, etc. Requests for consultations regarding plans requires an appointment and may take up to 14 business days to schedule. Requests for water supply data are normally handled on Thursday afternoons. The information contained in this transmission and any attachment is considered confidential and may be privileged. It is intended only for the use of the individual or entity named above. If the reader of this message is not the intended recipient, you are hereby notified that any dissemination, copying or distribution of this communication is prohibited. If you have received this message in error, please immediately reply to the sender and permanently delete it from your system.

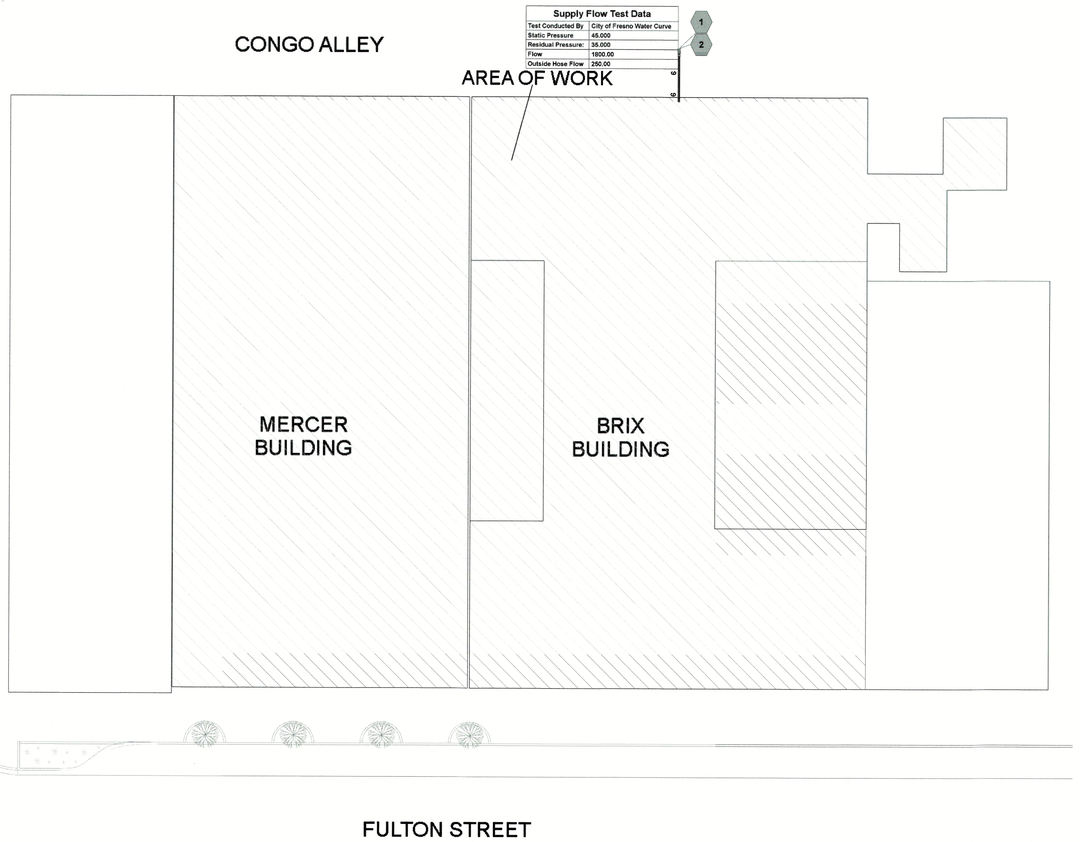

Sprinkler Components Legend

FLEXIBLE GROOVED COUPLING	HYDRAULIC NODE REF
PIPING W/ GROOVED FITTINGS	(EXISTING) PIPING
PIPING W/ THREADED FITTINGS	(DEMO) PIPING
PIPING W/ PENDENT SPRINKLER (Varies - See Details)	(NEW) PIPING
PIPING W/ UPRIGHT SPRINKLER (Varies - See Details)	FIRE PENETRATION THRU RATED WALL

Sprinkler Brace / Hanger Legend

Symbol	Description	Detail Reference
	LATERAL SEISMIC BRACE (Perpindicular)	Sheet(s) FP2.0
	LONGITUDINAL SEISMIC BRACE (Parallel)	Sheet(s) FP2.0
	4-WAY SEISMIC BRACE (Parallel / Perpindicular)	Sheet(s) FP2.0
	END OF LINE RESTRAINT	Sheet(s) FP1.0
	PIPE HANGER	Sheet(s) FP1.0-2.0

"Details are specific to construction type"

Project Information

Project Contruction: SINGLE STORY, V-B	Building Height: 30'	Project Occupancy: A-3, S-1
Project System Sqft (Per Floor / Building): BRIX BUILDING: 16,000 SQ.FT; MERCER BUILDING: 10,500 SQ.FT		Project System Types (Wet / Dry / Preaction): WET SYSTEM
Project Water Flow: 45PSI - STATIC 1,800 - GPM; 35PSI - RESIDUAL	Water Flow Test Location / Date: 45 Static , 35 Residual 1,800gpm 12/20/2021	U.G. Fire Main - Size / Type: 6" AC Piping
System Alarm Valve Type / Model: N/A	Water FLow Alarm Type / Model: EXISTING	BackFlow Preventer Model / Detector Check Model: --

SPRINKLER SYSTEM DESIGN CRITERIA:
1. SYSTEM SHALL BE DESIGNED TO CONFORM WITH NFPA 13 (2016 CALIFORNIA EDITION), CFC/CBC (2016), CITY OF FRESNO FIRE PREVENTION STANDARDS.
2. BRIX BUILDING - OBSTRUCTED CONCRETE TEE CONSTRUCTION.
MERCER BUILDING - UNOBSTRUCTED METAL WEB JOIST CONSTRUCTION.
3. FIRE SPRINKLER SYSTEM POINT OF CONNECTION AT EXISTING OVERHEAD SPRINKLER SYSTEM.
4. SPRINKLER DISCHARGE DENSITY FOR THIS PROJECT SHALL BE IN ACCORDANCE WITH NFPA 13 (2016) §11.2.1.2.4 WITH DENSITY CURVES IN ACCORDANCE WITH FIG. 11.2.3.1.1.
a. LIGHT HAZARD OCCUPANCY SHALL INCLUDE ALL OFFICE, CORRIDOR, DINING, CONCEALED ATTIC SPACES, RESTROOMS, AND SIMILAR AREAS. LIGHT HAZARD OCCUPANCY SHALL HAVE A DESIGN DENSITY OF 0.10 GPM/FT² OVER A MINIMUM REMOTE AREA OF 1500 FT². THE MAXIMUM ALLOWABLE PROTECTION AREA OF COVERAGE FOR A SPRINKLER SHALL BE IN ACCORDANCE WITH THE VALUE INDICATED IN TABLE 8.6.2.2.1(a) AND SHALL NOT EXCEED 225FT².
b. ORDINARY HAZARD GROUP I (OH1) SHALL FOOD SERVICE AREAS, ELECTRICAL AND MECHANICAL EQUIPMENT ROOMS, PORTE COCHERES, AND SIMILAR AREAS INDICATED IN NFPA 13 (2016) §A.5.3.1. OH1 OCCUPANCY SHALL HAVE A DENSITY OF 0.15GPM/FT² OVER A MINIMUM REMOTE AREA OF 1500FT². THE MAXIMUM ALLOWABLE PROTECTION AREA OF COVERAGE FOR A SPRINKLER SHALL BE IN ACCORDANCE WITH THE VALUE INDICATED IN TABLE 8.6.2.2.1(b) – 130FT².
c. ORDINARY HAZARD GROUP II (OH2) SHALL INCLUDE AUTOMOTIVE WORKSHOP AREAS, SCIENCE LABRATORIES, STAGES, STORAGE ROOMS, SIMILAR AREAS INDICATED IN NFPA 13 (2016) A.5.3.2. OH2 OCCUPANCY SHALL HAVE A DESIGN DENSITY OF 0.20GPM/FT² OVER A MINIMUM REMOTE AREA OF 1500FT². THE MAXIMUM ALLOWABLE PROTECTION AREA OF COVERAGE FOR A SPRINKLER SHALL BE IN ACCORDANCE WITH THE VALUE INDICATED IN TABLE 8.6.2.2.1(b) – 130FT².
5. MAXIMUM SPRINKLER SPACING SHALL NOT EXCEED 15'-0" ON CENTER, UNLESS SPECIFICALLY LISTED BY THE SPRINKLER MANUFACTURER.
6. HOSE STREAM ALLOWANCE GPM FLOW SHALL BE IN ACCORDANCE WITH THE VALUES INDICATED IN TABLE 11.2.3.1.2: LIGHT HAZARD – 100 GPM; ORD HAZARD – 250 GPM.
7. PER NFPA 13 (2016) §11.2.3.2.3.1, WHERE LISTED QUICK-RESPONSE SPRINKLERS ARE USED THROUGHOUT A SYSTEM OR PORTION OF A SYSTEM HAVING THE SAME HYDRAULIC DESIGN BASIS, THE SYSTEM AREA OF OPERATION SHALL BEPERMITTED TO BE REDUCED WITHOUT REVISING THE DENSITY AS INDICATED IN FIG. 11.2.3.1. NOTE: REMOTE AREA REDUCTION EXCLUDES EXTENDED COVERAGE SPRINKLER HEADS AND ONLY APPLICABLE TO LIGHT HAZARD OCCUPANCY ONLY.
8. PER NFPA 13 (2016) §11.2.3.2.4, THE SYSTEM REMOTE AREA SHALL BE INCREASED BY 30% WITHOUT REVISING THE DENSITY WHEN SPRAY SPRINKLERS AND CMSA SPRINKLERS ARE USED ON SLOPED CEILINGS WITH A PITCH EXCEEDING 1 IN 6 (A RISE OF 2 UNITS IN A RUN OF 12 UNITS) IN NON-STORAGE APPLICATIONS.
9. PER NFPA 13 (2016) §11.2.3.2.7.1, MULTIPLE ADJUSTMENTS CAN BE MADE TO THE REMOTE AREA WHEN BOTH QUICK RESPONSE SPRINKLER AREA REDUCTIONS AND SLOPED CEILING AREA INCREASE ARE APPLICABLE.
10. THE HYDRAULIC CALCULATION SOURCE SHALL BE TO THE FLOW TEST HYDRANT OR APPLICABLE STREET CONNECTION, ACCORDING TO LOCAL FIRE PREVENTION DISTRICT WATER CURVE DETERMINATIONS AND OR TESTING PROCEDURES. REFER TO SITE PLAN AND HYDRAULIC CALCULATIONS.
11. STORAGE HEIGHT SHALL NOT EXCEED 8-FEET.
12. MICROBIAL INDUCED CORROSION WILL NOT BE A FACTOR FOR THIS SYSTEM.
13. THE FIRE SPRINKLER ALARM SYSTEM SHALL BE DESIGNED, INSTALLED AND PERMITTED BY OTHERS, AND IS NOT IN THE SCOPE OF WORK. SUPERVISORY FLOW DETECTORS AND TAMPER RESISTANT VALVES INSTALLED ON THE OVERHEAD SPRINKLER SYSTEM PIPING WILL BE SUPPLIED AND INSTALLED BY FIRE SPRINKLER CONTRACTOR AND WIRED BY ALARM CONTRACTOR.
14. PER PROJECT SPECIFICATIONS, IF DESIGN OR MATERIALS DIFFER FROM THAT SPECIFIED HEREIN, SUPPLEMENTAL ENGINEERING DESIGN, SUBMITTAL, AND REVIEW SHALL BE REQUIRED.

GENERAL INSTALLATION REQUIREMENTS:
1. OVERHEAD FIRE SPRINKLER PIPING SHALL BE AS FOLLOWS (UNLESS NOTED OTHERWISE ON PLANS):
a. PIPING 2-1/2" AND LARGER SHALL BE SCH.10 BLACK STEEL WITH ROLLED FITTINGS, RISER TO BE SCH.10 BLACK STEEL PIPE.
b. PIPING 2" AND LESS SHALL BE SCH.40 BLACK STEEL.
c. DRAINAGE PIPING 2" OR SMALLER, DOWNSTREAM OF THE DRAIN VALVE SHALL BE SCH. 40 BLACK STEEL WITH ROLLED FITTINGS.
2. WHERE APPLICABLE IN UNOBSTRUCTED CONSTRUCTION CONDITIONS (AS DEFINED PER NFPA 13 §3.7.2); PER NFPA 13 (2016) §8.6.4.1.1, THE DISTANCE BETWEEN THE SPRINKLER DEFLECTOR AND THE CEILING SHALL BE A MINIMUM OF 1-INCH AND A MAXIMUM OF 12-INCHES THROUGHOUT THE AREA OF COVERAGE OF THE SPRINKLER.
3. WHERE APPLICABLE IN OBSTRUCTION CONSTRUCTION CONDITIONS (AS DEFINED PER NFPA 13 §3.7.1); PER NFPA 13 (2016) §8.6.4.1.2, SPRINKLER DEFLECTORS SHALL BE INSTALLED WITH THE DEFLECTORS WITHIN THE HORIZONTAL PLANES OF 1-INCH TO 6-INCHES BELOW THE STRUCTURAL MEMBERS AND A MAXIMUM DISTANCE OF 22-INCHES FROM THE CEILING/ROOF DECK.
4. PER NFPA 13 (2016) §8.3.1.3 UPRIGHT SPRINKLERS SHALL BE INSTALLED WITH THE FRAME ARMS PARALLEL TO THE BRANCH LINE, UNLESS SPECIFICALLY LISTED FOR OTHER ORIENTATION.
5. PER NFPA 13 (2016) §8.5.4.2 DEFLECTORS OF SPRINKLERS SHALL BE ALIGNED PARALLEL TO CEILINGS, ROOFS, OR THE INCLINE OF STAIRS.
6. PER NFPA 13 (2016) §8.15.1.1 CONCEALED SPACES OF EXPOSED COMBUSTIBLE CONSTRUCTION SHALL BE PROTECTED BY SPRINKLERS EXCEPT IN CONCEALED SPACES WHERE SPRINKLERS ARE NOT REQUIRED TO BE INSTALLED BY 8.15.1.2.1 THROUGH 8.15.1.2.18 AND 8.15.6.
7. PER NFPA 13 (2016) 8.15.1.2.1 CONCEALED SPACES OF NONCOMBUSTIBLE WITH MINIMAL COMBUSTIBLE LOADING HAVING NO ACCESS SHALL NOT REQUIRE SPRINKLER PROTECTION.
8. PER NFPA 13 (2106) 8.15.1.2.3 CONCEALED SPACES FORMED BY STUDS OR JOISTS WITH LESS THAN 6-INCHES BETWEEN THE INSIDE OR NEAR EDGES OF THE STUDS OR JOISTS SHALL NOT REQUIRE SPRINKLER PROTECTION.
9. PER NFPA 13 (2016) 8.15.1.2.7 CONCEALED SPACES FILLED WITH NONCOMBUSTIBLE INSULATION SHALL NOT REQUIRE SPRINKLER PROTECTION; MAXIMUM 2-INCH AIR GAP AT THE TOP OFTHE SPACE SHALL BE PERMITTED.
10. PER NFPA 13 (2016) 8.15.7.3 SPRINKLERS SHALL BE PERMITTED TO BE OMITTED FROM BELOW THE EXTERIOR PROJECTIONS OF COMBUSTIBLE CONSTRUCTION, PROVIDED THE EXPOSED FINISH MATERIAL ON THE EXTERIOR PROJECTIONS ARE NON-COMBUSTIBLE AND THE EXTERIOR PROJECTIONS CONTAIN ONLY SPRINKLERED CONCEALED SPACES OR ANY OF THE FOLLOWING UNSPRINKLERED COMBUSTIBLE CONCEALED SPACES: (1) COMBUSTIBLE CONCEALED SPACES FILLED ENTIRELY WITH NON-COMBUSTIBLE INSULATION, (2) LIGHT OR ORDINARY HAZARD OCCUPANCIES WHERE NONCOMBUSTIBLE OR LIMITED-COMBUSTIBLE CEILINGS ARE DIRECTLY ATTACHED TO THE BOTTOM OF SOLID WOOD JOISTS SO AS TO CREATE ENCLOSED JOIST SPACES 160-FT³ OR LESS IN VOLUME, INCLUDING SPACE BELOW INSULATION THAT IS LAID DIRECTLY ON TOP OR WITHIN THE CEILING JOISTS IN AN OTHERWISE SPRINKLERED ATTIC, OR (3) CONCEALED SPACES OVER ISOLATED SMALL EXTERIOR PROJECTIONS NOT EXCEEDING 55FT² IN AREA
11. CAGE-TYPE SPRINKLER HEAD GUARDS SHALL BE INSTALLED TO PROTECT ALL SPRINKLERS SUBJECT TO MECHANICAL DAMAGE, INCLUDING ALL NON-CONCEALED PENDENT SPRINKLER BELOW 8-FEET ABOVE FINISH FLOOR OR EXPOSED UPRIGHTS AND PENDENT SPRINKLER INSTALLED DIRECTLY ON PIPING WITHIN A GYMNASIUM AREA.
12. ALL HANGERS, BRACES, AND RESTRAINTS SHALL BE INSTALLED IN ACCORDANCE WITH NFPA 13 (2016 CALIFORNIA EDITION), CBC/CFC (2016), CITY OF FRESNO FIRE PREVENTION.
13. PER NFPA 13 (2016) §9.3.6.5 BRANCH LINE RESTRAINT SHALL NOT BE REQUIRED WHERE BRANCH LINES ARE SUPPORTED BY RODS LESS THAN 6" IN LENGTH WHEN MEASURED BETWEEN THE TOP OF THE PIPE TO THE POINT OF ATTACHMENT TO THE BUILDING STRUCTURE.

1 "FOR REFERENCE ONLY"

LICENSED ARCHITECT
JUSTIN DOUGLAS MURATORE
NO. C38020
RENEWAL: 6/23
STATE OF CALIFORNIA

MURATORE ASSOCIATES
2697 W ROSHVICOO LN
FRESNO, CA 93711
559/265-8634
info@muratoreassociates.com

CONSULTANT STAMP

FIRE SYSTEM SOLUTIONS, INC.
LIC. C-16, 982763
4277 W. RICHERT AVE. STE. 103
FRESNO, CALIFORNIA
(559) 275-4894

LICENSED FIRE PROTECTION CONTRACTOR
FIRE SYSTEM SOLUTIONS
C-16
C-10
LIC. # 982763
FIRE SPRINKLER
STATE OF CALIFORNIA

CWBSP-21-53
NICET# 154984

APPROVED
AHJ 2 8 2024
FRESNO FIRE DEPARTMENT

REVISION TABLE:

REV.	DESCRIPTION	DATE
1	PC COMMENTS	05-18-2024

DATE: 12/5/2021
SCALE: As indicated
JOB NUMBER:

ADDRESS:
BRIX & MERCER BLDGS
1221 FULTON ST
FRESNO, CA 93721

AHJ #: 21-1137

PROJECT:
FRESNO COUNTY DEPT. OF PUBLIC HEALTH BASEMENT RENOVATION

SHEET TITLE:
FIRE SPRINKLER SITE PLAN / GENERAL NOTES

SHEET NUMBER
FP0.1

OVERALL SITE PLAN - FRESNO COUNTY DEPARTMENT OF PUBLIC HEALTH
SCALE NTS

FILE PATH: P:\1 Work\Customers\County of Fresno\981-Bre-Mercer Basement\Design Documents\Working\981-Dwg-Bre Mercer Basement.rvt

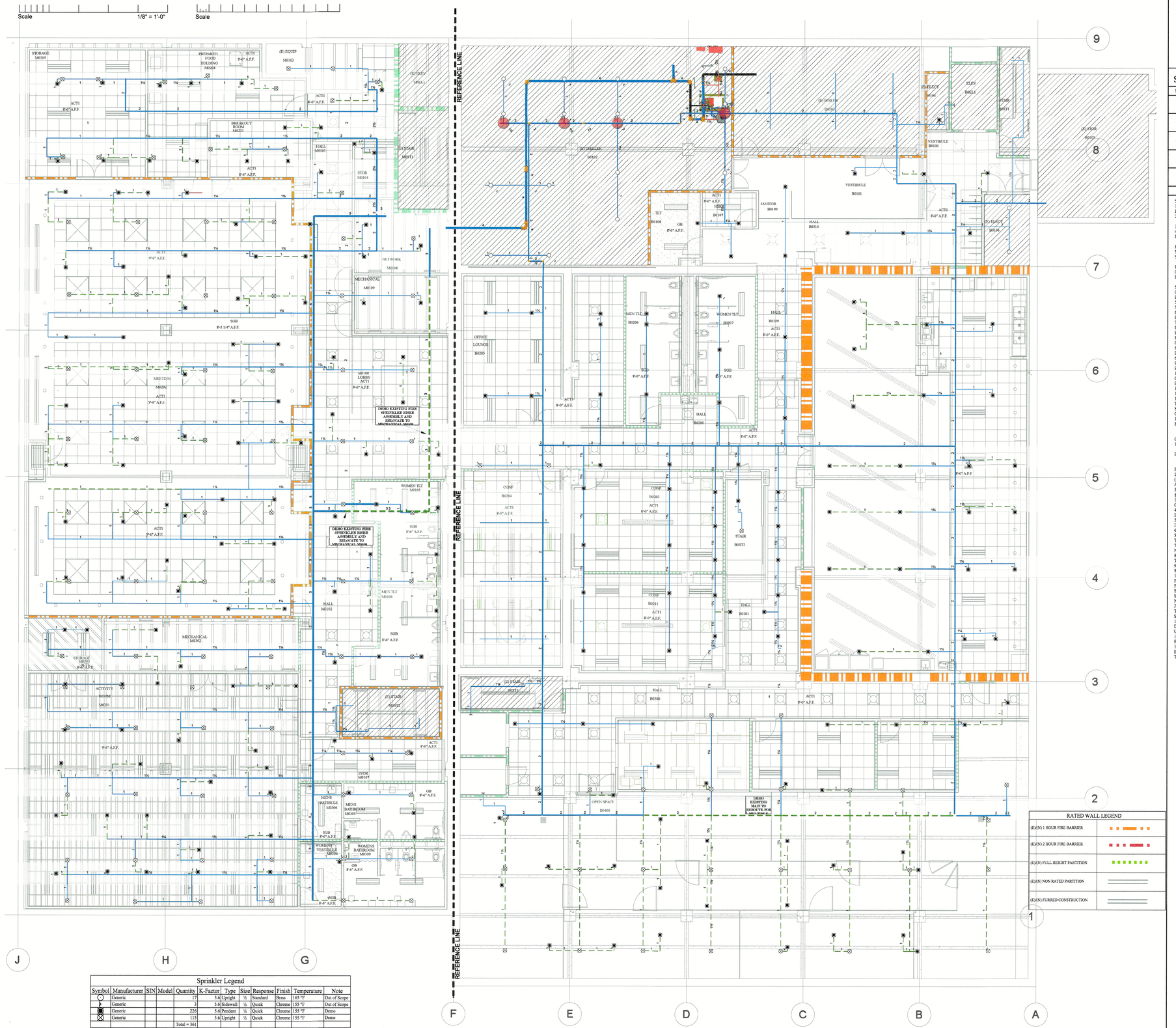

Sprinkler Legend										
Symbol	Manufacturer	SIN	Model	Quantity	K-Factor	Type	Size	Response	Finish	Temperature	Note
	Generic			17	5.6	Upright	½	Standard	Brass	165 °F	Out of Scope
	Generic			3	5.6	Sidewall	½	Quick	Chrome	155 °F	Out of Scope
	Generic			226	5.6	Pendent	½	Quick	Chrome	155 °F	Demo
	Generic			115	5.6	Upright	½	Quick	Chrome	155 °F	Demo
			Total = 361								

RATED WALL LEGEND	
(E)/(N) 1 HOUR FIRE BARRIER	
(E)/(N) 2 HOUR FIRE BARRIER	
(E)/(N) FULL HEIGHT PARTITION	
(E)/(N) NON RATED PARTITION	
(E)/(N) FURRED CONSTRUCTION	

FIRE SPRINKLER DEMO PLAN

SCALE 1/8" = 1'

"FOR REFERENCE ONLY"

Sprinkler Components Legend

FLEXIBLE GROOVED COUPLING	HYDRAULIC NODE REF
PIPING W/ GROOVED FITTINGS	(EXISTING) PIPING
PIPING W/ THREADED FITTINGS	(DEMO) PIPING
PIPING W/ PENDENT SPRINKLER (Varies - See Details)	(NEW) PIPING
PIPING W/ UPRIGHT SPRINKLER (Varies - See Details)	FIRE PENETRATION THRU RATED WALL

Sprinkler Brace / Hanger Legend

Symbol	Description	Detail Reference
	LATERAL SEISMIC BRACE (Perpindicular)	Sheet(s) FP2.0
	LONGITUDINAL SEISMIC BRACE (Parallel)	Sheet(s) FP2.0
	4-WAY SEISMIC BRACE (Parallel / Perpindicular)	Sheet(s) FP2.0
	END OF LINE RESTRAINT	Sheet(s) FP1.0
	PIPE HANGER	Sheet(s) FP1.0-2.0

SPRINKLER SYSTEM DESIGN CRITERIA:
1. SYSTEM SHALL BE DESIGNED TO CONFORM WITH NFPA 13 (2016 CALIFORNIA EDITION), CFC/CBC (2016), CITY OF FRESNO FIRE PREVENTION STANDARDS.
2. BRIX BUILDING - OBSTRUCTED CONCRETE TEE CONSTRUCTION.
MERCER BUILDING - UNOBSTRUCTED METAL WEB JOIST CONSTRUCTION.
3. FIRE SPRINKLER SYSTEM POINT OF CONNECTION AT EXISTING OVERHEAD SPRINKLER SYSTEM.
4. SPRINKLER DISCHARGE DENSITY FOR THIS PROJECT SHALL BE IN ACCORDANCE WITH NFPA 13 (2016) §11.2.1.2.4 WITH DENSITY CURVES IN ACCORDANCE WITH FIG. 11.2.3.1.1.
a. LIGHT HAZARD OCCUPANCY SHALL INCLUDE ALL OFFICE, CORRIDOR, DINING, CONCEALED ATTIC SPACES, RESTROOMS, AND SIMILAR AREAS. LIGHT HAZARD OCCUPANCY SHALL HAVE A DESIGN DENSITY OF 0.10 GPM/FT² OVER A MINIMUM REMOTE AREA OF 1500 FT². THE MAXIMUM ALLOWABLE PROTECTION AREA OF COVERAGE FOR A SPRINKLER SHALL BE IN ACCORDANCE WITH THE VALUE INDICATED IN TABLE 8.6.2.2.1(a) AND SHALL NOT EXCEED 225FT².
b. ORDINARY HAZARD GROUP 1 (OH1) SHALL FOOD SERVICE AREAS, ELECTRICAL AND MECHANICAL EQUIPMENT ROOMS, PORTE COCHERES, AND SIMILAR AREAS INDICATED IN NFPA 13 (2016) §A.5.3.1. OH1 OCCUPANCY SHALL HAVE A DENSITY OF 0.15GPM/FT² OVER A MINIMUM REMOTE AREA OF 1500FT². THE MAXIMUM ALLOWABLE PROTECTION AREA OF COVERAGE FOR A SPRINKLER SHALL BE IN ACCORDANCE WITH THE VALUE INDICATED IN TABLE 8.6.2.2.1(b) – 130FT².
c. ORDINARY HAZARD GROUP 2 (OH2) SHALL INCLUDE AUTOMOTIVE WORKSHOP AREAS, SCIENCE LABRATORIES, STAGES, STORAGE ROOMS, SIMILAR AREAS INDICATED IN NFPA 13 (2016) A.5.3.2. OH2 OCCUPANCY SHALL HAVE A DESIGN DENSITY OF 0.20GPM/FT² OVER A MINIMUM REMOTE AREA OF 1500FT². THE MAXIMUM ALLOWABLE PROTECTION AREA OF COVERAGE FOR A SPRINKLER SHALL BE IN ACCORDANCE WITH THE VALUE INDICATED IN TABLE 8.6.2.2.1(b) – 130FT².
5. MAXIMUM SPRINKLER SPACING SHALL NOT EXCEED 15'-0" ON CENTER, UNLESS SPECIFICALLY LISTED BY THE SPRINKLER MANUFACTURER.
6. HOSE STREAM ALLOWANCE GPM FLOW SHALL BE IN ACCORDANCE WITH THE VALUES INDICATED IN TABLE 11.2.3.1.2: LIGHT HAZARD – 100 GPM, ORD HAZARD – 250 GPM.
7. PER NFPA 13 (2016) §11.2.3.2.3.1, WHERE LISTED QUICK-RESPONSE SPRINKLERS ARE USED THROUGHOUT A SYSTEM OR PORTION OF A SYSTEM HAVING THE SAME HYDRAULIC DESIGN BASIS, THE SYSTEM AREA OF OPERATION SHALL BEPERMITTED TO BE REDUCED WITHOUT REVISING THE DENSITY AS INDICATED IN FIG. 11.2.3.2.3.1. NOTE: REMOTE AREA REDUCTION EXCLUDES EXTENDED COVERAGE SPRINKLER HEADS AND ONLY APPLICABLE TO LIGHT HAZARD OCCUPANCY ONLY.
8. PER NFPA 13 (2016) §11.2.3.2.4, THE SYSTEM REMOTE AREA SHALL BE INCREASED BY 30% WITHOUT REVISING THE DENSITY WHEN SPRAY SPRINKLERS AND CMSA SPRINKLERS ARE USED ON SLOPED CEILINGS WITH A PITCH EXCEEDING 1 IN 6 (A RISE OF 2 UNITS IN A RUN OF 12 UNITS) IN NON-STORAGE APPLICATIONS.
9. PER NFPA 13 (2016) §11.2.3.2.7.1, MULTIPLE ADJUSTMENTS CAN BE MADE TO THE REMOTE AREA WHEN BOTH QUICK RESPONSE SPRINKLER AREA REDUCTIONS AND SLOPED CEILING AREA INCREASE ARE APPLICABLE.
10. THE HYDRAULIC CALCULATION SOURCE SHALL BE TO THE FLOW TEST HYDRANT OR APPLICABLE STREET CONNECTION, ACCORDING TO LOCAL FIRE PREVENTION DISTRICT WATER CURVE DETERMINATIONS AND OR TESTING PROCEDURES. REFER TO SITE PLAN AND HYDRAULIC CALCULATIONS.
11. STORAGE HEIGHT SHALL NOT EXCEED 8-FEET.
12. MICROBIAL INDUCED CORROSION WILL NOT BE A FACTOR FOR THIS SYSTEM.
13. THE FIRE SPRINKLER ALARM SYSTEM SHALL BE DESIGNED, INSTALLED AND PERMITTED BY OTHERS, AND IS NOT IN THE SCOPE OF WORK. SUPERVISORY FLOW DETECTORS AND TAMPER RESISTANT VALVES INSTALLED ON THE OVERHEAD SPRINKLER SYSTEM PIPING WILL BE SUPPLIED AND INSTALLED BY FIRE SPRINKLER CONTRACTOR AND WIRED BY ALARM CONTRACTOR.
14. PER PROJECT SPECIFICATIONS, IF DESIGN OR MATERIALS DIFFER FROM THAT SPECIFIED HEREIN, SUPPLEMENTAL ENGINEERING DESIGN, SUBMITTAL, AND REVIEW SHALL BE REQUIRED.

GENERAL INSTALLATION REQUIREMENTS:
1. OVERHEAD FIRE SPRINKLER PIPING SHALL BE AS FOLLOWS (UNLESS NOTED OTHERWISE ON PLANS):
a. PIPING 2-1/2" AND LARGER SHALL BE SCH.10 BLACK STEEL WITH ROLLED FITTINGS, RISER TO BE SCH.10 BLACK STEEL PIPE.
b. PIPING 2" AND LESS SHALL BE SCH.40 BLACK STEEL.
c. DRAINAGE PIPING 2" OR SMALLER, DOWNSTREAM OF THE DRAIN VALVE SHALL BE SCH. 40 BLACK STEEL WITH ROLLED FITTINGS.
2. WHERE APPLICABLE IN UNOBSTRUCTED CONSTRUCTION CONDITIONS (AS DEFINED PER NFPA 13 §3.7.2), PER NFPA 13 (2016) §8.6.4.1.1, THE DISTANCE BETWEEN THE SPRINKLER DEFLECTOR AND THE CEILING SHALL BE A MINIMUM OF 1-INCH AND A MAXIMUM OF 12-INCHES THROUGHOUT THE AREA OF COVERAGE OF THE SPRINKLER.
3. WHERE APPLICABLE IN OBSTRUCTION CONSTRUCTION CONDITIONS (AS DEFINED PER NFPA 13 §3.7.1); PER NFPA 13 (2016) §8.6.4.1.2, SPRINKLER DEFLECTORS SHALL BE INSTALLED WITH THE DEFLECTORS WITHIN THE HORIZONTAL PLANES OF 1-INCH TO 6-INCHES BELOW THE STRUCTURAL MEMBERS AND A MAXIMUM DISTANCE OF 22-INCHES FROM THE CEILING/ROOF DECK.
4. PER NFPA 13 (2016) §8.3.1.3 UPRIGHT SPRINKLERS SHALL BE INSTALLED WITH THE FRAME ARMS PARALLEL TO THE BRANCH LINE, UNLESS SPECIFICALLY LISTED FOR OTHER ORIENTATION.
5. PER NFPA 13 (2016) §8.5.4.2 DEFLECTORS OF SPRINKLERS SHALL BE ALIGNED PARALLEL TO CEILINGS, ROOFS, OR THE INCLINE OF STAIRS.
6. PER NFPA 13 (2016) §8.15.1.1 CONCEALED SPACES OF EXPOSED COMBUSTIBLE CONSTRUCTION SHALL BE PROTECTED BY SPRINKLERS EXCEPT IN CONCEALED SPACES WHERE SPRINKLERS ARE NOT REQUIRED TO BE INSTALLED BY 8.15.1.2.1 THROUGH 8.15.1.2.18 AND 8.15.6.
7. PER NFPA 13 (2016) 8.15.1.2.1 CONCEALED SPACES OF NONCOMBUSTIBLE WITH MINIMAL COMBUSTIBLE LOADING HAVING NO ACCESS SHALL NOT REQUIRE SPRINKLER PROTECTION.
8. PER NFPA 13 (2106) 8.15.1.2.3 CONCEALED SPACES FORMED BY STUDS OR JOISTS WITH LESS THAN 6-INCHES BETWEEN THE INSIDE OR NEAR EDGES OF THE STUDS OR JOISTS SHALL NOT REQUIRE SPRINKLER PROTECTION.
9. PER NFPA 13 (2016) 8.15.1.2.7 CONCEALED SPACES FILLED WITH NONCOMBUSTIBLE INSULATION SHALL NOT REQUIRE SPRINKLER PROTECTION; MAXIMUM 2-INCH AIR GAP AT THE TOP OF THE SPACE SHALL BE PERMITTED.
10. PER NFPA 13 (2016) 8.15.7.3 SPRINKLERS SHALL BE PERMITTED TO BE OMITTED FROM BELOW THE EXTERIOR PROJECTIONS OF COMBUSTIBLE CONSTRUCTION, PROVIDED THE EXPOSED FINISH MATERIAL ON THE EXTERIOR PROJECTIONS ARE NON-COMBUSTIBLE AND THE EXTERIOR PROJECTIONS CONTAIN ONLY SPRINKLERED CONCEALED SPACES OR ANY OF THE FOLLOWING UNSPRINKLERED COMBUSTIBLE CONCEALED SPACES: (1) COMBUSTIBLE CONCEALED SPACES FILLED ENTIRELY WITH NON-COMBUSTIBLE INSULATION; (2) LIGHT OR ORDINARY HAZARD OCCUPANCIES WHERE NONCOMBUSTIBLE OR LIMITED-COMBUSTIBLE CEILINGS ARE DIRECTLY ATTACHED TO THE BOTTOM OF SOLID WOOD JOISTS SO AS TO CREATE ENCLOSED JOIST SPACES 160-FT³ OR LESS IN VOLUME, INCLUDING SPACE BELOW INSULATION THAT IS LAID DIRECTLY ON TOP OR WITHIN THE CEILING JOISTS IN AN OTHERWISE SPRINKLERED ATTIC, OR (3) CONCEALED SPACES OVER ISOLATED SMALL EXTERIOR PROJECTIONS NOT EXCEEDING 55FT² IN AREA.
11. CAGE-TYPE SPRINKLER HEAD GUARDS SHALL BE INSTALLED TO PROTECT ALL SPRINKLERS SUBJECT TO MECHANICAL DAMAGE, INCLUDING ALL NON-CONCEALED PENDENT SPRINKLER BELOW 8-FEET ABOVE FINISH FLOOR OR EXPOSED UPRIGHTS AND PENDENT SPRINKLER INSTALLED DIRECTLY ON PIPING WITHIN A GYMNASIUM AREA.
12. ALL HANGERS, BRACES, AND RESTRAINTS SHALL BE INSTALLED IN ACCORDANCE WITH NFPA 13 (2016 CALIFORNIA EDITION), CBC/CFC (2016), CITY OF FRESNO FIRE PREVENTION.
13. PER NFPA 13 (2016) §9.3.6.5 BRANCH LINE RESTRAINT SHALL NOT BE REQUIRED WHERE BRANCH LINES ARE SUPPORTED BY RODS LESS THAN 6" IN LENGTH WHEN MEASURED BETWEEN THE TOP OF THE PIPE TO THE POINT OF ATTACHMENT TO THE BUILDING STRUCTURE.

LICENSED ARCHITECT JUSTIN DOUGLAS MURDOCK NO. C38020 RENEWAL: 6/23 STATE OF CALIFORNIA

MURATORE ASSOCIATES
2897 W ROBINWOOD LN
FRESNO, CA 93711
559/365-6634
info@muratoreassociates.com

CONSULTANT STAMP

FIRE SYSTEM SOLUTIONS, INC.
LIC. C-16, 982763
4277 W. RICHERT AVE. STE. 103
FRESNO, CALIFORNIA
(559) 275-4894
LICENSED FIRE PROTECTION CONTRACTOR FIRE SYSTEM SOLUTIONS C-16 C-10 LIC. # 982763 FIRE SPRINKLER STATE OF CALIFORNIA

CWBSP-21-53
NICET# 154984

APPROVED
AUG 29 2024
FRESNO FIRE DEPARTMENT

REVISION TABLE:

REV.	DESCRIPTION	DATE
1	PC COMMENTS	05-18-2024

DATE: 11/11/2022
SCALE: As indicated
JOB NUMBER:

ADDRESS:
BRIX & MERCER BLDGS
1221 FULTON ST
FRESNO, CA 93721

AHJ #: 21-1137

PROJECT:
FRESNO COUNTY DEPT. OF PUBLIC HEALTH BASEMENT RENOVATION

SHEET TITLE:
FIRE SPRINKLER DEMO

SHEET NUMBER
FP0.2

8/26/2021 6:21:13 PM
FILE PATH: P:\...\Brix Mercer Basement\Design Documents\Drawings\Working\BRIX-dwg Brix Mercer Basement.rvt

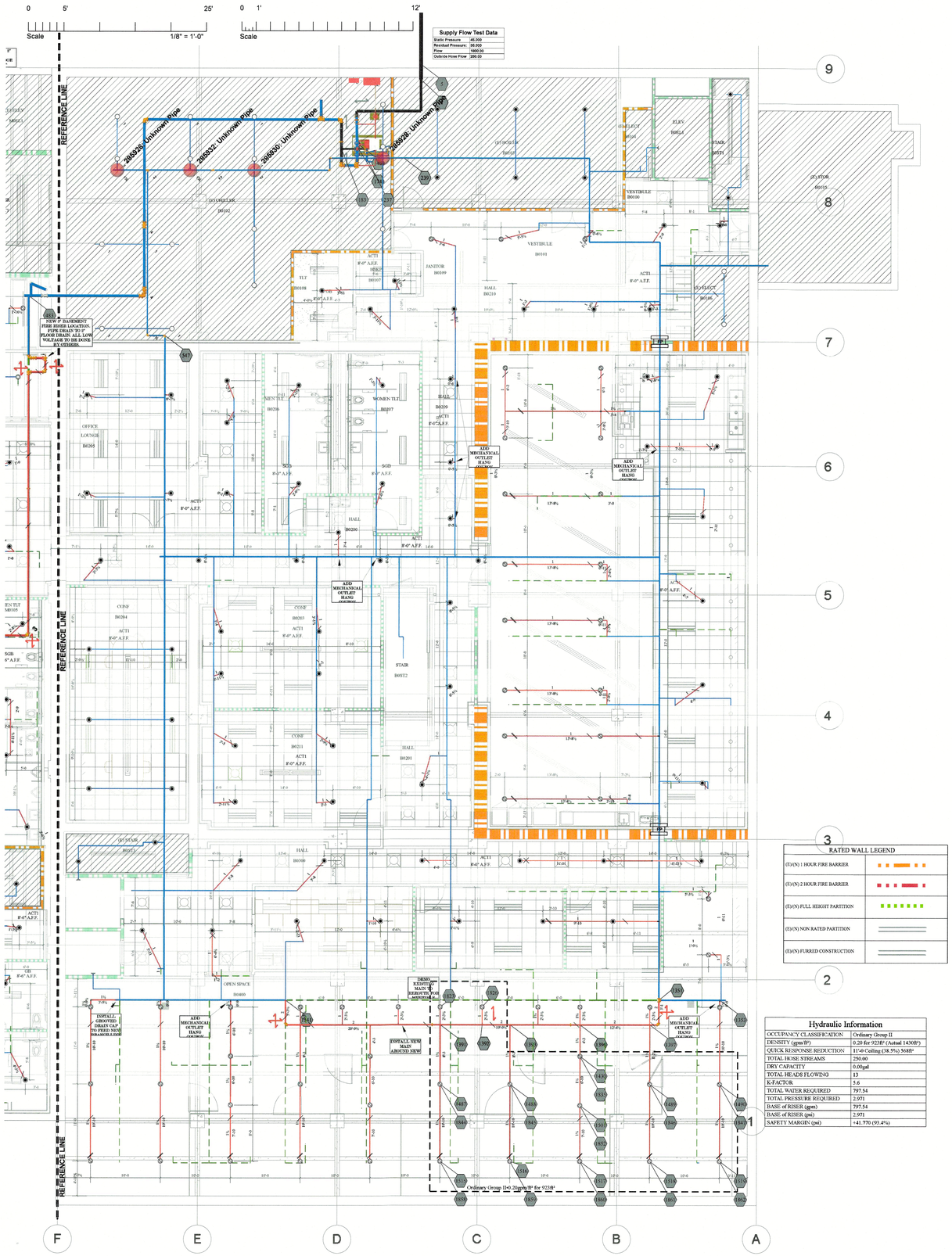

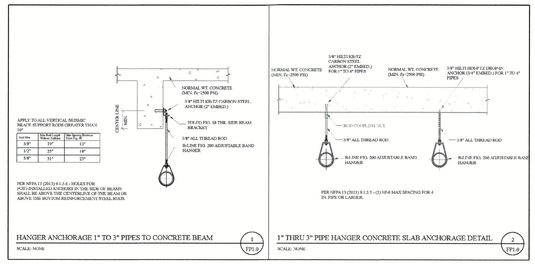

Sprinkler Legend

Symbol	Manufacturer	SIN	Model	Quantity	K-Factor	Type	Size	Response	Finish	Temperature	Note
	Generic			17	5.6	Upright	½	Standard	Brass	165 °F	Out of Scope
	Generic			3	5.6	Sidewall	½	Quick	Chrome	155 °F	Out of Scope
	Minimax		MX7302	112	5.6	Pendent	½	Quick	Chrome	155 °F	
	Minimax		MX7300	59	5.6	Upright	½	Quick	Brass	155 °F	
	Minimax		MX7300	2	5.6	Upright	½	Quick	Brass	200 °F	
				Total = 193							

Sprinkler Components Legend

- FLEXIBLE GROOVED COUPLING
- PIPING W/ GROOVED FITTINGS
- PIPING W/ THREADED FITTINGS
- PIPING W/ PENDENT SPRINKLER (Varies - See Details)
- PIPING W/ UPRIGHT SPRINKLER (Varies - See Details)
- HYDRAULIC NODE REF
- (EXISTING) PIPING
- (DEMO) PIPING
- (NEW) PIPING
- FIRE PENETRATION THRU RATED WALL

Sprinkler Brace / Hanger Legend

Symbol	Description	Detail Reference
	LATERAL SEISMIC BRACE (Perpindicular)	Sheet(s) FP2.0
	LONGITUDINAL SEISMIC BRACE (Parallel)	Sheet(s) FP2.0
	4-WAY SEISMIC BRACE (Parallel / Perpindicular)	Sheet(s) FP2.0
	END OF LINE RESTRAINT	Sheet(s) FP1.0
	PIPE HANGER	Sheet(s) FP1.0-2.0

SPRINKLER SYSTEM DESIGN CRITERIA:
1. SYSTEM SHALL BE DESIGNED TO CONFORM WITH NFPA 13 (2016 CALIFORNIA EDITION), CFC/CBC (2016), CITY OF FRESNO FIRE PREVENTION STANDARDS.
2. BRIX BUILDING - OBSTRUCTED CONCRETE TEE CONSTRUCTION.
MERCER BUILDING - UNOBSTRUCTED METAL WEB JOIST CONSTRUCTION.
3. FIRE SPRINKLER SYSTEM POINT OF CONNECTION AT EXISTING OVERHEAD SPRINKLER SYSTEM.
4. SPRINKLER DISCHARGE DENSITY FOR THIS PROJECT SHALL BE IN ACCORDANCE WITH NFPA 13 (2016) §11.2.1.2.4 WITH DENSITY CURVES IN ACCORDANCE WITH FIG. 11.2.3.1.1.
a. LIGHT HAZARD OCCUPANCY SHALL INCLUDE ALL OFFICE, CORRIDOR, DINING, CONCEALED ATTIC SPACES, RESTROOMS, AND SIMILAR AREAS. LIGHT HAZARD OCCUPANCY SHALL HAVE A DESIGN DENSITY OF 0.10 GPM/FT² OVER A MINIMUM REMOTE AREA OF 1500 FT². THE MAXIMUM ALLOWABLE PROTECTION AREA OF COVERAGE FOR A SPRINKLER SHALL BE IN ACCORDANCE WITH THE VALUE INDICATED IN TABLE 8.6.2.2.1(a) AND SHALL NOT EXCEED 225FT².
b. ORDINARY HAZARD GROUP I (OH1) SHALL FOOD SERVICE AREAS, ELECTRICAL AND MECHANICAL EQUIPMENT ROOMS, PORTE COCHERES, AND SIMILAR AREAS INDICATED IN NFPA 13 (2016) §A.5.3.1: OH1 OCCUPANCY SHALL HAVE A DENSITY OF 0.15GPM/FT² OVER A MINIMUM REMOTE AREA OF 1500FT². THE MAXIMUM ALLOWABLE PROTECTION AREA OF COVERAGE FOR A SPRINKLER SHALL BE IN ACCORDANCE WITH THE VALUE INDICATED IN TABLE 8.6.2.2.1(b) – 130FT².
c. ORDINARY HAZARD GROUP II (OH2) SHALL INCLUDE AUTOMOTIVE WORKSHOP AREAS, SCIENCE LABRATORIES, STAGES, STORAGE ROOMS, SIMILAR AREAS INDICATED IN NFPA 13 (2016) A.5.3.2. OH2 OCCUPANCY SHALL HAVE A DESIGN DENSITY OF 0.20GPM/FT² OVER A MINIMUM REMOTE AREA OF 1500FT². THE MAXIMUM ALLOWABLE PROTECTION AREA OF COVERAGE FOR A SPRINKLER SHALL BE IN ACCORDANCE WITH THE VALUE INDICATED IN TABLE 8.6.2.2.1(b) – 130FT².
5. MAXIMUM SPRINKLER SPACING SHALL NOT EXCEED 15'-0" ON CENTER, UNLESS SPECIFICALLY LISTED BY THE SPRINKLER MANUFACTURER.
6. HOSE STREAM ALLOWANCE GPM FLOW SHALL BE IN ACCORDANCE WITH THE VALUES INDICATED IN TABLE 11.2.3.1.2: LIGHT HAZARD – 100 GPM; ORD HAZARD – 250 GPM.
7. PER NFPA 13 (2016) §11.2.3.2.3.1, WHERE LISTED QUICK-RESPONSE SPRINKLERS ARE USED THROUGHOUT A SYSTEM OR PORTION OF A SYSTEM HAVING THE SAME HYDRAULIC DESIGN BASIS, THE SYSTEM AREA OF OPERATION SHALL BEPERMITTED TO BE REDUCED WITHOUT REVISING THE DENSITY AS INDICATED IN FIG. 11.2.3.2.3.1. NOTE: REMOTE AREA REDUCTION EXCLUDES EXTENDED COVERAGE SPRINKLER HEADS AND ONLY APPLICABLE TO LIGHT HAZARD OCCUPANCY ONLY.
8. PER NFPA 13 (2016) §11.2.3.2.4, THE SYSTEM REMOTE AREA SHALL BE INCREASED BY 30% WITHOUT REVISING THE DENSITY WHEN SPRAY SPRINKLERS AND CMSA SPRINKLERS ARE USED ON SLOPED CEILINGS WITH A PITCH EXCEEDING 1 IN 6 (A RISE OF 2 UNITS IN A RUN OF 12 UNITS) IN NON-STORAGE APPLICATIONS.
9. PER NFPA 13 (2016) §11.2.3.2.7.1, MULTIPLE ADJUSTMENTS CAN BE MADE TO THE REMOTE AREA WHEN BOTH QUICK RESPONSE SPRINKLER AREA REDUCTIONS AND SLOPED CEILING AREA INCREASE ARE APPLICABLE.
10. THE HYDRAULIC CALCULATION SOURCE SHALL BE TO THE FLOW TEST HYDRANT OR APPLICABLE STREET CONNECTION, ACCORDING TO LOCAL FIRE PREVENTION DISTRICT WATER CURVE DETERMINATIONS AND OR TESTING PROCEDURES. REFER TO SITE PLAN AND HYDRAULIC CALCULATIONS.
11. STORAGE HEIGHT SHALL NOT EXCEED 8-FEET.
12. MICROBIAL INDUCED CORROSION WILL NOT BE A FACTOR FOR THIS SYSTEM.
13. THE FIRE SPRINKLER ALARM SYSTEM SHALL BE DESIGNED, INSTALLED AND PERMITTED BY OTHERS, AND IS NOT IN THE SCOPE OF WORK. SUPERVISORY FLOW DETECTORS AND TAMPER RESISTANT VALVES INSTALLED ON THE OVERHEAD SPRINKLER SYSTEM PIPING WILL BE SUPPLIED AND INSTALLED BY THIS FIRE SPRINKLER CONTRACTOR AND WIRED BY ALARM CONTRACTOR.
14. PER PROJECT SPECIFICATIONS, IF DESIGN OR MATERIALS DIFFER FROM THAT SPECIFIED HEREIN, SUPPLEMENTAL ENGINEERING DESIGN, SUBMITTAL, AND REVIEW SHALL BE REQUIRED.

GENERAL INSTALLATION REQUIREMENTS:
1. OVERHEAD FIRE SPRINKLER PIPING SHALL BE AS FOLLOWS (UNLESS NOTED OTHERWISE ON PLANS):
a. PIPING 2-1/2" AND LARGER SHALL BE SCH.10 BLACK STEEL WITH ROLLED FITTINGS, RISER TO BE SCH.10 BLACK STEEL PIPE.
b. PIPING 2" AND LESS SHALL BE SCH.40 BLACK STEEL.
c. DRAINAGE PIPING 2" OR SMALLER, DOWNSTREAM OF THE DRAIN VALVE SHALL BE SCH. 40 BLACK STEEL WITH ROLLED FITTINGS.
2. WHERE APPLICABLE IN UNOBSTRUCTED CONSTRUCTION CONDITIONS (AS DEFINED PER NFPA 13 §3.7.2); PER NFPA 13 (2016) §8.6.4.1.1, THE DISTANCE BETWEEN THE SPRINKLER DEFLECTOR AND THE CEILING SHALL BE A MINIMUM OF 1-INCH AND A MAXIMUM OF 12-INCHES THROUGHOUT THE AREA OF COVERAGE OF THE SPRINKLER.
3. WHERE APPLICABLE IN OBSTRUCTION CONSTRUCTION CONDITIONS (AS DEFINED PER NFPA 13 §3.7.1); PER NFPA 13 (2016) §8.6.4.1.2, SPRINKLER DEFLECTORS SHALL BE INSTALLED WITH THE DEFLECTORS WITHIN THE HORIZONTAL PLANES OF 1-INCH TO 6-INCHES BELOW THE STRUCTURAL MEMBERS AND A MAXIMUM DISTANCE OF 22-INCHES FROM THE CEILING/ROOF DECK.
4. PER NFPA 13 (2016) §8.3.1.3 UPRIGHT SPRINKLERS SHALL BE INSTALLED WITH THE FRAME ARMS PARALLEL TO THE BRANCH LINE, UNLESS SPECIFICALLY LISTED FOR OTHER ORIENTATION.
5. PER NFPA 13 (2016) §8.5.4.2 DEFLECTORS OF SPRINKLERS SHALL BE ALIGNED PARALLEL TO CEILINGS, ROOFS, OR THE INCLINE OF STAIRS.
6. PER NFPA 13 (2016) §8.15.1.1 CONCEALED SPACES OF EXPOSED COMBUSTIBLE CONSTRUCTION SHALL BE PROTECTED BY SPRINKLERS EXCEPT IN CONCEALED SPACES WHERE SPRINKLERS ARE NOT REQUIRED TO BE INSTALLED BY 8.15.1.2.1 THROUGH 8.15.1.2.18 AND 8.15.6.
7. PER NFPA 13 (2016) 8.15.1.2.1 CONCEALED SPACES OF NONCOMBUSTIBLE WITH MINIMAL COMBUSTIBLE LOADING HAVING NO ACCESS SHALL NOT REQUIRE SPRINKLER PROTECTION.
8. PER NFPA 13 (2106) 8.15.1.2.3 CONCEALED SPACES FORMED BY STUDS OR JOISTS WITH LESS THAN 6-INCHES BETWEEN THE INSIDE OR NEAR EDGES OF THE STUDS OR JOISTS SHALL NOT REQUIRE SPRINKLER PROTECTION.
9. PER NFPA 13 (2016) 8.15.1.2.7 CONCEALED SPACES FILLED WITH NONCOMBUSTIBLE INSULATION SHALL NOT REQUIRE SPRINKLER PROTECTION; MAXIMUM 2-INCH AIR GAP AT THE TOP OFTHE SPACE SHALL BE PERMITTED.
10. PER NFPA 13 (2016) 8.15.7.3 SPRINKLERS SHALL BE PERMITTED TO BE OMITTED FROM BELOW THE EXTERIOR PROJECTIONS OF COMBUSTIBLE CONSTRUCTION, PROVIDED THE EXPOSED FINISH MATERIAL ON THE EXTERIOR PROJECTIONS ARE NON-COMBUSTIBLE AND THE EXTERIOR PROJECTIONS CONTAIN ONLY SPRINKLERED CONCEALED SPACES OR ANY OF THE FOLLOWING UNSPRINKLERED COMBUSTIBLE CONCEALED SPACES: (1) COMBUSTIBLE CONCEALED SPACES FILLED ENTIRELY WITH NON-COMBUSTIBLE INSULATION, (2) LIGHT OR ORDINARY HAZARD OCCUPANCIES WHERE NONCOMBUSTIBLE OR LIMITED-COMBUSTIBLE CEILINGS ARE DIRECTLY ATTACHED TO THE BOTTOM OF SOLID WOOD JOISTS SO AS TO CREATE ENCLOSED JOIST SPACES 160-FT² OR LESS IN VOLUME, INCLUDING SPACE BELOW INSULATION THAT IS LAID DIRECTLY ON TOP OR WITHIN THE CEILING JOISTS IN AN OTHERWISE SPRINKLERED ATTIC, OR (3) CONCEALED SPACES OVER ISOLATED SMALL EXTERIOR PROJECTIONS NOT EXCEEDING 55FT² IN AREA
11. CAGE-TYPE SPRINKLER HEAD GUARDS SHALL BE INSTALLED TO PROTECT ALL SPRINKLERS SUBJECT TO MECHANICAL DAMAGE, INCLUDING ALL NON-CONCEALED PENDENT SPRINKLER BELOW 8-FEET ABOVE FINISH FLOOR OR EXPOSED UPRIGHTS AND PENDENT SPRINKLER INSTALLED DIRECTLY ON PIPING WITHIN A GYMNASIUM AREA.
12. ALL HANGERS, BRACES, AND RESTRAINTS SHALL BE INSTALLED IN ACCORDANCE WITH NFPA 13 (2016 CALIFORNIA EDITION), CBC/CFC (2016), CITY OF FRESNO FIRE PREVENTION.
13. PER NFPA 13 (2016) §9.3.6.5 BRANCH LINE RESTRAINT SHALL NOT BE REQUIRED WHERE BRANCH LINES ARE SUPPORTED BY RODS LESS THAN 6" IN LENGTH WHEN MEASURED BETWEEN THE TOP OF THE PIPE TO THE POINT OF ATTACHMENT TO THE BUILDING STRUCTURE.

"FOR REFERENCE ONLY"

LICENSED ARCHITECT JUSTIN DOUGLAS MURATORE NO. C38020 RENEWAL: 8/23 STATE OF CALIFORNIA

MURATORE ASSOCIATES
2697 W ROBINWOOD LN 559/305-8534
FRESNO, CA 93711 info@muratoreassociates.com

CONSULTANT STAMP

FIRE SYSTEM SOLUTIONS, INC.
LIC. C-16, 982763
4277 W. RICHERT AVE. STE. 103
FRESNO, CALIFORNIA
(559) 275-4894

LICENSED FIRE PROTECTION CONTRACTOR FIRE SYSTEM SOLUTIONS C-16 C-10 LIC. # 982763 FIRE SPRINKLER STATE OF CALIFORNIA

CWBSP-21-53
NICET# 154984

APPROVED
AUG 23 2024
FRESNO FIRE DEPARTMENT

REVISION TABLE:

REV.	DESCRIPTION	DATE
1	PC COMMENTS	05-18-2024

DATE: 11/11/2022
SCALE: As indicated
JOB NUMBER:

ADDRESS:
BRIX & MERCER BLDGS
1221 FULTON ST
FRESNO, CA 93721

AHJ #: 21-1137

PROJECT:
FRESNO COUNTY DEPT. OF PUBLIC HEALTH BASEMENT RENOVATION

SHEET TITLE:
BRIX BUILDING FIRE SPRINKLER PIPING PLAN

SHEET NUMBER
FP1.0

8/26/2021 6:21:13 PM
FILE PATH: P:\...\Revit\Customized\County of Fresno\BH - Brix Mercer Basement\Design Documents\Drawings\Working\BH - Brix Mercer Basement.rvt
© 2021 Reproduction Prohibited

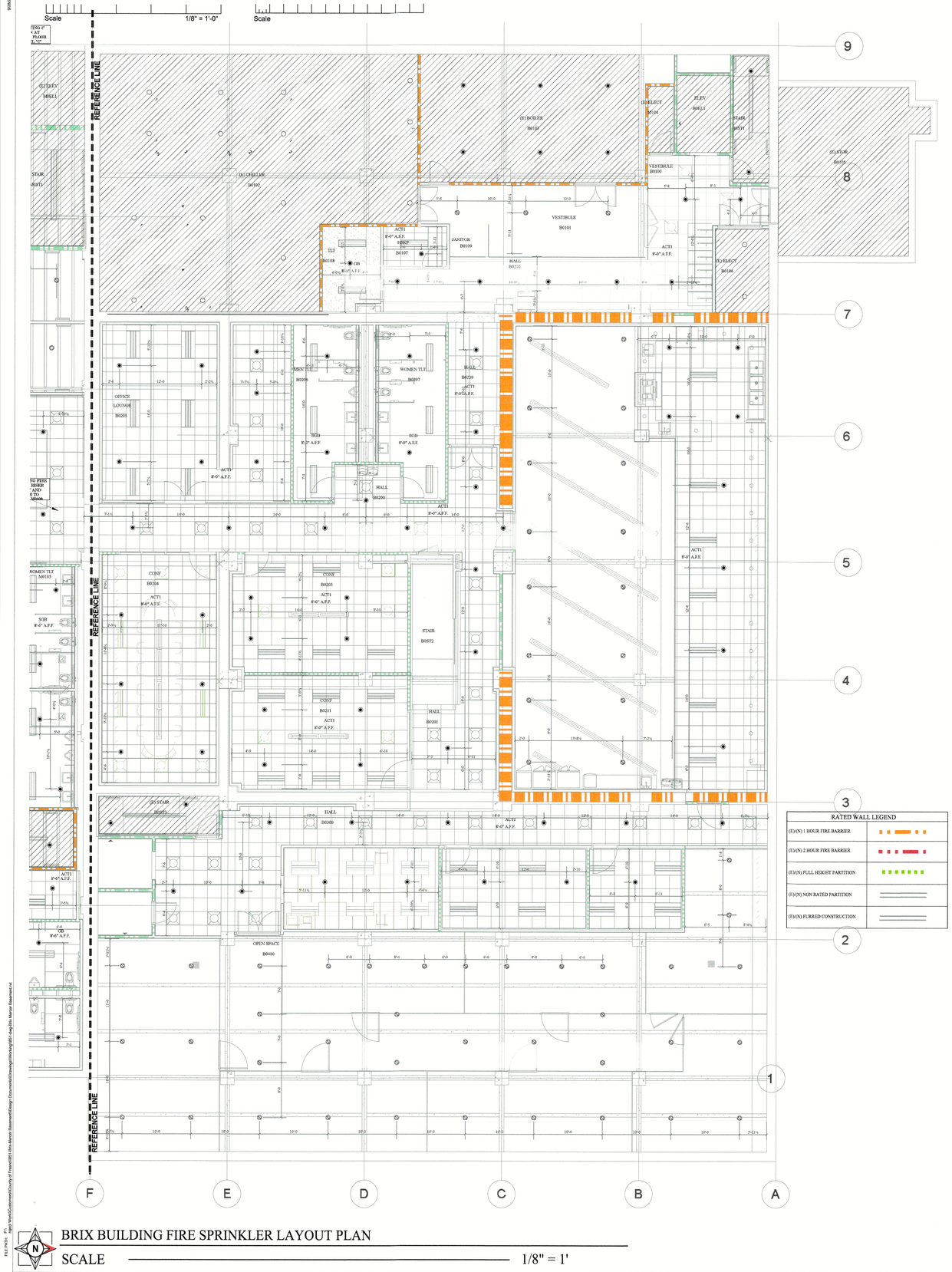

BRIX BUILDING FIRE SPRINKLER LAYOUT PLAN

SCALE 1/8" = 1'

RATED WALL LEGEND	
(E)/(N) 1 HOUR FIRE BARRIER	
(E)/(N) 2 HOUR FIRE BARRIER	
(E)/(N) FULL HEIGHT PARTITION	
(E)/(N) NON RATED PARTITION	
(E)/(N) FURRED CONSTRUCTION	

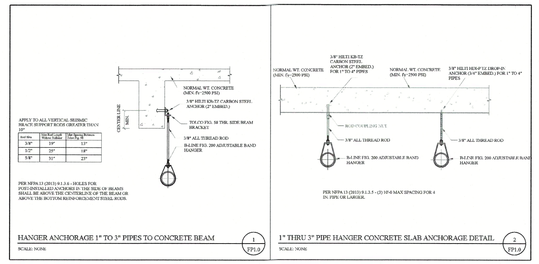

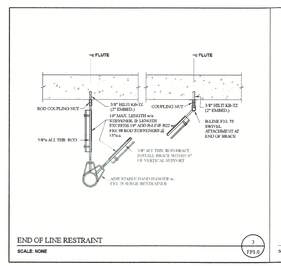

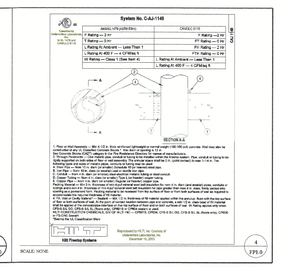

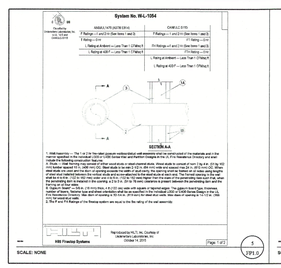

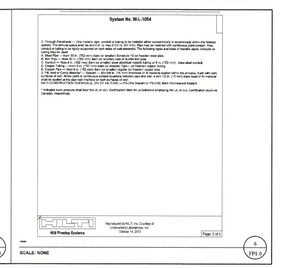

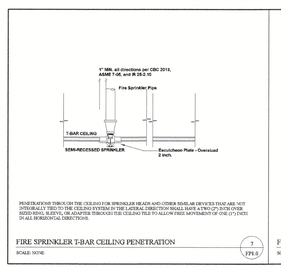

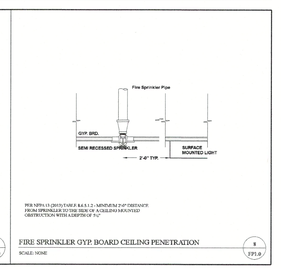

Sprinkler Legend										
Symbol	Manufacturer	SIN	Model	Quantity	K-Factor	Type	Size	Response	Finish	Temperature	Note
	Generic			17	5.6	Upright	½	Standard	Brass	165 °F	Out of Scope
	Generic			3	5.6	Sidewall	½	Quick	Chrome	155 °F	Out of Scope
	Minimax	MX7302		119	5.6	Pendent	½	Quick	Chrome	155 °F	
	Minimax	MX7300		60	5.6	Upright	½	Quick	Brass	155 °F	
	Minimax	MX7300		2	5.6	Upright	½	Quick	Brass	200 °F	
				Total = 201							

Sprinkler Components Legend

FLEXIBLE-GROOVED COUPLING	HYDRAULIC NODE REF
PIPING W/ GROOVED FITTINGS	(EXISTING) PIPING
PIPING W/ THREADED FITTINGS	(DEMO) PIPING
PIPING W/ PENDENT SPRINKLER (Varies - See Details)	(NEW) PIPING
PIPING W/ UPRIGHT SPRINKLER (Varies - See Details)	FIRE PENETRATION THRU RATED WALL

Sprinkler Brace / Hanger Legend

Symbol	Description	Detail Reference
	LATERAL SEISMIC BRACE (Perpindicular)	Sheet(s) FP2.0
	LONGITUDINAL SEISMIC BRACE (Parallel)	Sheet(s) FP2.0
	4-WAY SEISMIC BRACE (Parallel / Perpindicular)	Sheet(s) FP2.0
	END OF LINE RESTRAINT	Sheet(s) FP1.0
	PIPE HANGER	Sheet(s) FP1.0-2.0

SPRINKLER SYSTEM DESIGN CRITERIA:
1. SYSTEM SHALL BE DESIGNED TO CONFORM WITH NFPA 13 (2016 CALIFORNIA EDITION), CFC/CBC (2016), CITY OF FRESNO FIRE PREVENTION STANDARDS.
2. BRIX BUILDING - OBSTRUCTED CONCRETE TEE CONSTRUCTION.
MERCER BUILDING - UNOBSTRUCTED METAL WEB JOIST CONSTRUCTION.
3. FIRE SPRINKLER SYSTEM POINT OF CONNECTION AT EXISTING OVERHEAD SPRINKLER SYSTEM.
4. SPRINKLER DISCHARGE DENSITY FOR THIS PROJECT SHALL BE IN ACCORDANCE WITH NFPA 13 (2016) §11.2.1.2.4 WITH DENSITY CURVES IN ACCORDANCE WITH FIG. 11.2.3.1.1.
a. LIGHT HAZARD OCCUPANCY SHALL INCLUDE ALL OFFICE, CORRIDOR, DINING, CONCEALED ATTIC SPACES, RESTROOMS, AND SIMILAR AREAS. LIGHT HAZARD OCCUPANCY SHALL HAVE A DESIGN DENSITY OF 0.10 GPM/FT² OVER A MINIMUM REMOTE AREA OF 1500 FT². THE MAXIMUM ALLOWABLE PROTECTION AREA OF COVERAGE FOR A SPRINKLER SHALL BE IN ACCORDANCE WITH THE VALUE INDICATED IN TABLE 8.6.2.2.1(a) AND SHALL NOT EXCEED 225FT².
b. ORDINARY HAZARD GROUP 1 (OH1) SHALL FOOD SERVICE AREAS, ELECTRICAL AND MECHANICAL EQUIPMENT ROOMS, PORTE COCHERES, AND SIMILAR AREAS INDICATED IN NFPA 13 (2016) §A.5.3.1: OH1 OCCUPANCY SHALL HAVE A DENSITY OF 0.15GPM/FT² OVER A MINIMUM REMOTE AREA OF 1500FT². THE MAXIMUM ALLOWABLE PROTECTION AREA OF COVERAGE FOR A SPRINKLER SHALL BE IN ACCORDANCE WITH THE VALUE INDICATED IN TABLE 8.6.2.2.1(b) – 130FT².
c. ORDINARY HAZARD GROUP 2 (OH2) SHALL INCLUDE AUTOMOTIVE WORKSHOP AREAS, SCIENCE LABRATORIES, STAGES, STORAGE ROOMS, SIMILAR AREAS INDICATED IN NFPA 13 (2016) A.5.3.2. OH2 OCCUPANCY SHALL HAVE A DESIGN DENSITY OF 0.20GPM/FT² OVER A MINIMUM REMOTE AREA OF 1500FT². THE MAXIMUM ALLOWABLE PROTECTION AREA OF COVERAGE FOR A SPRINKLER SHALL BE IN ACCORDANCE WITH THE VALUE INDICATED IN TABLE 8.6.2.2.1(b) – 130FT².
5. MAXIMUM SPRINKLER SPACING SHALL NOT EXCEED 15'-0" ON CENTER, UNLESS SPECIFICALLY LISTED BY THE SPRINKLER MANUFACTURER.
6. HOSE STREAM ALLOWANCE GPM FLOW SHALL BE IN ACCORDANCE WITH THE VALUES INDICATED IN TABLE 11.2.3.1.2: LIGHT HAZARD – 100 GPM, ORD HAZARD – 250 GPM.
7. PER NFPA 13 (2016) §11.2.3.2.3.1, WHERE LISTED QUICK-RESPONSE SPRINKLERS ARE USED THROUGHOUT A SYSTEM OR PORTION OF A SYSTEM HAVING THE SAME HYDRAULIC DESIGN BASIS, THE SYSTEM AREA OF OPERATION SHALL BEPERMITTED TO BE REDUCED WITHOUT REVISING THE DENSITY AS INDICATED IN FIG. 11.2.3.2.3.1. NOTE: REMOTE AREA REDUCTION EXCLUDES EXTENDED COVERAGE SPRINKLER HEADS AND ONLY APPLICABLE TO LIGHT HAZARD OCCUPANCY ONLY.
8. PER NFPA 13 (2016) §11.2.3.2.4, THE SYSTEM REMOTE AREA SHALL BE INCREASED BY 30% WITHOUT REVISING THE DENSITY WHEN SPRAY SPRINKLERS AND CMSA SPRINKLERS ARE USED ON SLOPED CEILINGS WITH A PITCH EXCEEDING 1 IN 6 (A RISE OF 2 UNITS IN A RUN OF 12 UNITS) IN NON-STORAGE APPLICATIONS.
9. PER NFPA 13 (2016) §11.2.3.2.7.1, MULTIPLE ADJUSTMENTS CAN BE MADE TO THE REMOTE AREA WHEN BOTH QUICK RESPONSE SPRINKLER AREA REDUCTIONS AND SLOPED CEILING AREA INCREASE ARE APPLICABLE.
10. THE HYDRAULIC CALCULATION SOURCE SHALL BE TO THE FLOW TEST HYDRANT OR APPLICABLE STREET CONNECTION, ACCORDING TO LOCAL FIRE PREVENTION DISTRICT WATER CURVE DETERMINATIONS AND OR TESTING PROCEDURES. REFER TO SITE PLAN AND HYDRAULIC CALCULATIONS.
11. STORAGE HEIGHT SHALL NOT EXCEED 8-FEET.
12. MICROBIAL INDUCED CORROSION WILL NOT BE A FACTOR FOR THIS SYSTEM.
13. THE FIRE SPRINKLER ALARM SYSTEM SHALL BE DESIGNED, INSTALLED AND PERMITTED BY OTHERS, AND IS NOT IN THE SCOPE OF WORK. SUPERVISORY FLOW DETECTORS AND TAMPER RESISTANT VALVES INSTALLED ON THE OVERHEAD SPRINKLER SYSTEM PIPING WILL BE SUPPLIED AND INSTALLED BY FIRE SPRINKLER CONTRACTOR AND WIRED BY ALARM CONTRACTOR.
14. PER PROJECT SPECIFICATIONS, IF DESIGN OR MATERIALS DIFFER FROM THAT SPECIFIED HEREIN, SUPPLEMENTAL ENGINEERING DESIGN, SUBMITTAL, AND REVIEW SHALL BE REQUIRED.

GENERAL INSTALLATION REQUIREMENTS:
1. OVERHEAD FIRE SPRINKLER PIPING SHALL BE AS FOLLOWS (UNLESS NOTED OTHERWISE ON PLANS):
a. PIPING 2-1/2" AND LARGER SHALL BE SCH.10 BLACK STEEL WITH ROLLED FITTINGS, RISER TO BE SCH.10 BLACK STEEL PIPE.
b. PIPING 2" AND LESS SHALL BE SCH.40 BLACK STEEL.
c. DRAINAGE PIPING 2" OR SMALLER, DOWNSTREAM OF THE DRAIN V ALVE SHALL BE SCH. 40 BLACK STEEL WITH ROLLED FITTINGS.
2. WHERE APPLICABLE IN UNOBSTRUCTED CONSTRUCTION CONDITIONS (AS DEFINED PER NFPA 13 §3.7.2); PER NFPA 13 (2016) §8.6.4.1.1, THE DISTANCE BETWEEN THE SPRINKLER DEFLECTOR AND THE CEILING SHALL BE A MINIMUM OF 1-INCH AND A MAXIMUM OF 12-INCHES THROUGHOUT THE AREA OF COVERAGE OF THE SPRINKLER.
3. WHERE APPLICABLE IN OBSTRUCTION CONSTRUCTION CONDITIONS (AS DEFINED PER NFPA 13 §3.7.1); PER NFPA 13 (2016) §8.6.4.1.2, SPRINKLER DEFLECTORS SHALL BE INSTALLED WITH THE DEFLECTORS WITHIN THE HORIZONTAL PLANES OF 1-INCH TO 6-INCHES BELOW THE STRUCTURAL MEMBERS AND A MAXIMUM DISTANCE OF 22-INCHES FROM THE CEILING/ROOF DECK.
4. PER NFPA 13 (2016) §8.3.1.3 UPRIGHT SPRINKLERS SHALL BE INSTALLED WITH THE FRAME ARMS PARALLEL TO THE BRANCH LINE, UNLESS SPECIFICALLY LISTED FOR OTHER ORIENTATION.
5. PER NFPA 13 (2016) §8.5.4.2 DEFLECTORS OF SPRINKLERS SHALL BE ALIGNED PARALLEL TO CEILINGS, ROOFS, OR THE INCLINE OF STAIRS.
6. PER NFPA 13 (2016) §8.15.1.1 CONCEALED SPACES OF EXPOSED COMBUSTIBLE CONSTRUCTION SHALL BE PROTECTED BY SPRINKLERS EXCEPT IN CONCEALED SPACES WHERE SPRINKLERS ARE NOT REQUIRED TO BE INSTALLED BY 8.15.1.2.1 THROUGH 8.15.1.2.18 AND 8.15.6.
7. PER NFPA 13 (2016) 8.15.1.2.1 CONCEALED SPACES OF NONCOMBUSTIBLE WITH MINIMAL COMBUSTIBLE LOADING HAVING NO ACCESS SHALL NOT REQUIRE SPRINKLER PROTECTION.
8. PER NFPA 13 (2106) 8.15.1.2.3 CONCEALED SPACES FORMED BY STUDS OR JOISTS WITH LESS THAN 6-INCHES BETWEEN THE INSIDE OR NEAR EDGES OF THE STUDS OR JOISTS SHALL NOT REQUIRE SPRINKLER PROTECTION.
9. PER NFPA 13 (2016) 8.15.1.2.7 CONCEALED SPACES FILLED WITH NONCOMBUSTIBLE INSULATION SHALL NOT REQUIRE SPRINKLER PROTECTION; MAXIMUM 2-INCH AIR GAP AT THE TOP OFTHE SPACE SHALL BE PERMITTED.
10. PER NFPA 13 (2016) 8.15.7.3 SPRINKLERS SHALL BE PERMITTED TO BE OMITTED FROM BELOW THE EXTERIOR PROJECTIONS OF COMBUSTIBLE CONSTRUCTION, PROVIDED THE EXPOSED FINISH MATERIAL ON THE EXTERIOR PROJECTIONS ARE NON-COMBUSTIBLE AND THE EXTERIOR PROJECTIONS CONTAIN ONLY SPRINKLERED CONCEALED SPACES OR ANY OF THE FOLLOWING UNSPRINKLERED COMBUSTIBLE CONCEALED SPACES: (1) COMBUSTIBLE CONCEALED SPACES FILLED ENTIRELY WITH NON-COMBUSTIBLE INSULATION, (2) LIGHT OR ORDINARY HAZARD OCCUPANCIES WHERE NONCOMBUSTIBLE OR LIMITED-COMBUSTIBLE CEILINGS ARE DIRECTLY ATTACHED TO THE BOTTOM OF SOLID WOOD JOISTS SO AS TO CREATE ENCLOSED JOIST SPACES 160-FT³ OR LESS IN VOLUME, INCLUDING SPACE BELOW INSULATION THAT IS LAID DIRECTLY ON TOP OR WITHIN THE CEILING JOISTS IN AN OTHERWISE SPRINKLERED ATTIC, OR (3) CONCEALED SPACES OVER ISOLATED SMALL EXTERIOR PROJECTIONS NOT EXCEEDING 55FT² IN AREA
11. CAGE-TYPE SPRINKLER HEAD GUARDS SHALL BE INSTALLED TO PROTECT ALL SPRINKLERS SUBJECT TO MECHANICAL DAMAGE, INCLUDING ALL NON-CONCEALED PENDENT SPRINKLER BELOW 8-FEET ABOVE FINISH FLOOR OR EXPOSED UPRIGHTS AND PENDENT SPRINKLER INSTALLED DIRECTLY ON PIPING WITHIN A GYMNASIUM AREA.
12. ALL HANGERS, BRACES, AND RESTRAINTS SHALL BE INSTALLED IN ACCORDANCE WITH NFPA 13 (2016 CALIFORNIA EDITION), CBC/CFC (2016), CITY OF FRESNO FIRE PREVENTION.
13. PER NFPA 13 (2016) §9.3.6.5 BRANCH LINE RESTRAINT SHALL NOT BE REQUIRED WHERE BRANCH LINES ARE SUPPORTED BY RODS LESS THAN 6" IN LENGTH WHEN MEASURED BETWEEN THE TOP OF THE PIPE TO THE POINT OF ATTACHMENT TO THE BUILDING STRUCTURE.

⚠1 "FOR REFERENCE ONLY"

LICENSED ARCHITECT JUSTIN DOUGLAS MURADORE NO. C38020 RENEWAL: 8/23 STATE OF CALIFORNIA

URATORE ASSOCIATES
2897 W ROBINWOOD LN
FRESNO, CA 93711
559/365-6534
info@muratoreassociates.com

CONSULTANT STAMP

FIRE SYSTEM SOLUTIONS, INC.
LIC. C-16, 982763
4277 W. RICHERT AVE. STE. 103
FRESNO, CALIFORNIA
(559) 275-4894

LICENSED FIRE PROTECTION CONTRACTOR FIRE SYSTEM SOLUTIONS C-16 C-10 LIC. # 982763 FIRE SPRINKLER STATE OF CALIFORNIA

APPROVED
AUG 29 2024
FRESNO FIRE DEPARTMENT

REVISION TABLE:

REV.	DESCRIPTION	DATE
1	PC COMMENTS	05-18-2024

DATE: 11/11/2022
SCALE: As indicated
JOB NUMBER:

ADDRESS:
BRIX & MERCER BLDGS
1221 FULTON ST
FRESNO, CA 93721

AHJ #: 21-1137

PROJECT:
FRESNO COUNTY DEPT. OF PUBLIC HEALTH BASEMENT RENOVATION

SHEET TITLE:
BRIX BUILDING FIRE SPRINKLER LAYOUT PLAN

SHEET NUMBER
FP1.1
⚠1

FILE PATH: P:\Jobs\Work\Customers\County of Fresno\BH Jobs\Mercer Basement\Design Documents\Drawings\Workingfiles\Design\Brix Mercer Basement.rvt

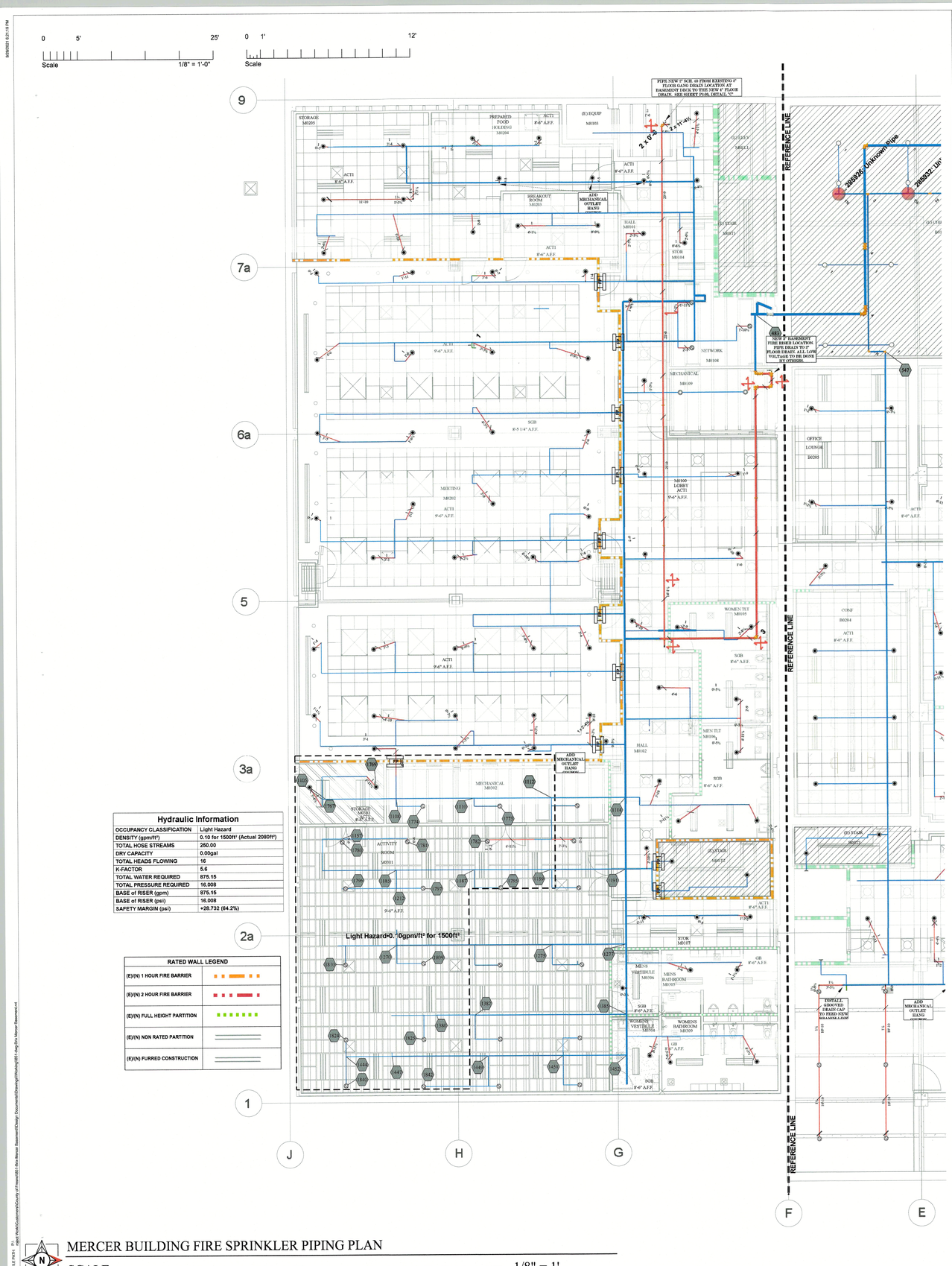

Hydraulic Information

OCCUPANCY CLASSIFICATION	Light Hazard
DENSITY (gpm/ft²)	0.10 for 1500ft² (Actual 2080ft²)
TOTAL HOSE STREAMS	250.00
DRY CAPACITY	0.00gal
TOTAL HEADS FLOWING	16
K-FACTOR	5.6
TOTAL WATER REQUIRED	875.15
TOTAL PRESSURE REQUIRED	16.008
BASE of RISER (gpm)	875.15
BASE of RISER (psi)	16.008
SAFETY MARGIN (psi)	+28.732 (64.2%)

RATED WALL LEGEND

(E)/(N) 1 HOUR FIRE BARRIER	
(E)/(N) 2 HOUR FIRE BARRIER	
(E)/(N) FULL HEIGHT PARTITION	
(E)/(N) NON RATED PARTITION	
(E)/(N) FURRED CONSTRUCTION	

MERCER BUILDING FIRE SPRINKLER PIPING PLAN
SCALE 1/8" = 1'

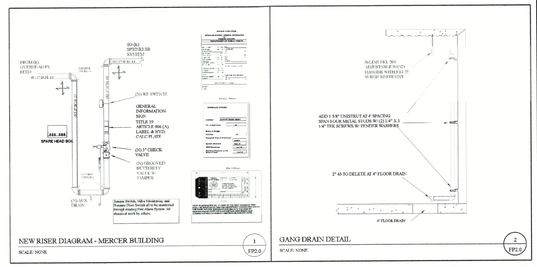

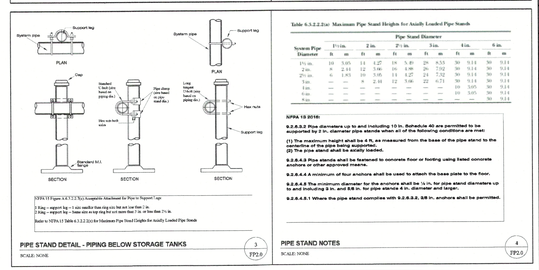

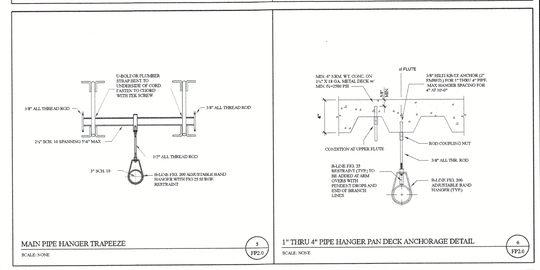

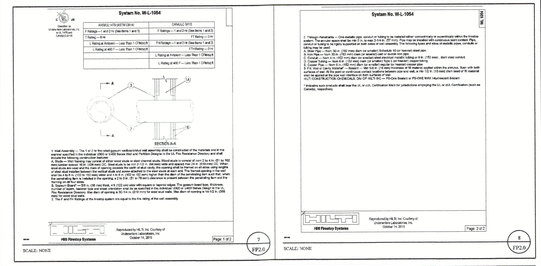

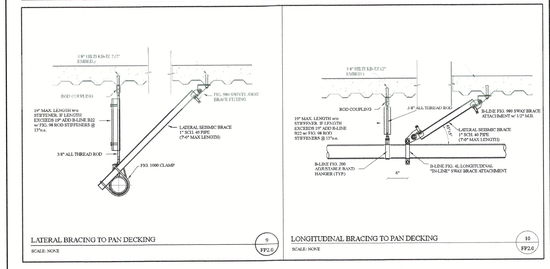

Sprinkler Legend

Symbol	Manufacturer	SIN	Model	Quantity	K-Factor	Type	Size	Response	Finish	Temperature	Note
	Generic			12	5.6	Upright	½	Standard	Brass	165 °F	Out of Scope
	Generic			2	5.6	Sidewall	½	Quick	Chrome	155 °F	Out of Scope
	Minimax	MX7302		117	5.6	Pendent	½	Quick	Chrome	155 °F	
	Minimax	MX7300		43	5.6	Upright	½	Quick	Brass	155 °F	
	Minimax	MX7300		2	5.6	Upright	½	Quick	Brass	200 °F	
				Total = 176							

Sprinkler Components Legend

- FLEXIBLE GROOVED COUPLING
- PIPING W/ GROOVED FITTINGS
- PIPING W/ THREADED FITTINGS
- PIPING W/ PENDENT SPRINKLER (Varies - See Details)
- PIPING W/ UPRIGHT SPRINKLER (Varies - See Details)
- HYDRAULIC NODE REF
- (EXISTING) PIPING
- (DEMO) PIPING
- (NEW) PIPING
- FIRE PENETRATION THRU RATED WALL

Sprinkler Brace / Hanger Legend

Symbol	Description	Detail Reference
	LATERAL SEISMIC BRACE (Perpindicular)	Sheet(s) FP2.0
	LONGITUDINAL SEISMIC BRACE (Parallel)	Sheet(s) FP2.0
	4-WAY SEISMIC BRACE (Parallel / Perpindicular)	Sheet(s) FP2.0
	END OF LINE RESTRAINT	Sheet(s) FP1.0
	PIPE HANGER	Sheet(s) FP1.0-2.0

SPRINKLER SYSTEM DESIGN CRITERIA:
1. SYSTEM SHALL BE DESIGNED TO CONFORM WITH NFPA 13 (2016 CALIFORNIA EDITION), CFC/CBC (2016), CITY OF FRESNO FIRE PREVENTION STANDARDS.
2. BRIX BUILDING - OBSTRUCTED CONCRETE TEE CONSTRUCTION.
MERCER BUILDING - UNOBSTRUCTED METAL WEB JOIST CONSTRUCTION.
3. FIRE SPRINKLER SYSTEM POINT OF CONNECTION AT EXISTING OVERHEAD SPRINKLER SYSTEM.
4. SPRINKLER DISCHARGE DENSITY FOR THIS PROJECT SHALL BE IN ACCORDANCE WITH NFPA 13 (2016) §11.2.1.2.4 WITH DENSITY CURVES IN ACCORDANCE WITH FIG. 11.2.3.1.1:
a. LIGHT HAZARD OCCUPANCY SHALL INCLUDE ALL OFFICE, CORRIDOR, DINING, CONCEALED ATTIC SPACES, RESTROOMS, AND SIMILAR AREAS. LIGHT HAZARD OCCUPANCY SHALL HAVE A DESIGN DENSITY OF 0.10 GPM/FT² OVER A MINIMUM REMOTE AREA OF 1500 FT². THE MAXIMUM ALLOWABLE PROTECTION AREA OF COVERAGE FOR A SPRINKLER SHALL BE IN ACCORDANCE WITH THE VALUE INDICATED IN TABLE 8.6.2.2.1(a) AND SHALL NOT EXCEED 225FT².
b. ORDINARY HAZARD GROUP 1 (OH1) SHALL FOOD SERVICE AREAS, ELECTRICAL AND MECHANICAL EQUIPMENT ROOMS, PORTE COCHERES, AND SIMILAR AREAS INDICATED IN NFPA 13 (2016) §A.5.3.1. OH1 OCCUPANCY SHALL HAVE A DENSITY OF 0.15GPM/FT² OVER A MINIMUM REMOTE AREA OF 1500FT². THE MAXIMUM ALLOWABLE PROTECTION AREA OF COVERAGE FOR A SPRINKLER SHALL BE IN ACCORDANCE WITH THE VALUE INDICATED IN TABLE 8.6.2.2.1(b) – 130FT².
c. ORDINARY HAZARD GROUP II (OH2) SHALL INCLUDE AUTOMOTIVE WORKSHOP AREAS, SCIENCE LABRATORIES, STAGES, STORAGE ROOMS, SIMILAR AREAS INDICATED IN NFPA 13 (2016) A.5.3.2. OH2 OCCUPANCY SHALL HAVE A DESIGN DENSITY OF 0.20GPM/FT² OVER A MINIMUM REMOTE AREA OF 1500FT². THE MAXIMUM ALLOWABLE PROTECTION AREA OF COVERAGE FOR A SPRINKLER SHALL BE IN ACCORDANCE WITH THE VALUE INDICATED IN TABLE 8.6.2.2.1(b) – 130FT².
5. MAXIMUM SPRINKLER SPACING SHALL NOT EXCEED 15'-0" ON CENTER, UNLESS SPECIFICALLY LISTED BY THE SPRINKLER MANUFACTURER.
6. HOSE STREAM ALLOWANCE GPM FLOW SHALL BE IN ACCORDANCE WITH THE VALUES INDICATED IN TABLE 11.2.3.1.2:
LIGHT HAZARD – 100 GPM; ORD HAZARD – 250 GPM.
7. PER NFPA 13 (2016) §11.2.3.2.3.1, WHERE LISTED QUICK-RESPONSE SPRINKLERS ARE USED THROUGHOUT A SYSTEM OR PORTION OF A SYSTEM HAVING THE SAME HYDRAULIC DESIGN BASIS, THE SYSTEM AREA OF OPERATION SHALL BEPERMITTED TO BE REDUCED WITHOUT REVISING THE DENSITY AS INDICATED IN FIG. 11.2.3.2.3.1. NOTE: REMOTE AREA REDUCTION EXCLUDES EXTENDED COVERAGE SPRINKLER HEADS AND ONLY APPLICABLE TO LIGHT HAZARD OCCUPANCY ONLY.
8. PER NFPA 13 (2016) §11.2.3.2.4, THE SYSTEM REMOTE AREA SHALL BE INCREASED BY 30% WITHOUT REVISING THE DENSITY WHEN SPRAY SPRINKLERS AND CMSA SPRINKLERS ARE USED ON SLOPED CEILINGS WITH A PITCH EXCEEDING 1 IN 6 (A RISE OF 2 UNITS IN A RUN OF 12 UNITS) IN NON-STORAGE APPLICATIONS.
9. PER NFPA 13 (2016) §11.2.3.2.7.1, MULTIPLE ADJUSTMENTS CAN BE MADE TO THE REMOTE AREA WHEN BOTH QUICK RESPONSE SPRINKLER AREA REDUCTIONS AND SLOPED CEILING AREA INCREASE ARE APPLICABLE.
10. THE HYDRAULIC CALCULATION SOURCE SHALL BE TO THE FLOW TEST HYDRANT OR APPLICABLE STREET CONNECTION, ACCORDING TO LOCAL FIRE PREVENTION DISTRICT WATER CURVE DETERMINATIONS AND OR TESTING PROCEDURES. REFER TO SITE PLAN AND HYDRAULIC CALCULATIONS.
11. STORAGE HEIGHT SHALL NOT EXCEED 8-FEET.
12. MICROBIAL INDUCED CORROSION WILL NOT BE A FACTOR FOR THIS SYSTEM.
13. THE FIRE SPRINKLER ALARM SYSTEM SHALL BE DESIGNED, INSTALLED AND PERMITTED BY OTHERS, AND IS NOT IN THE SCOPE OF WORK. SUPERVISORY FLOW DETECTORS AND TAMPER RESISTANT VALVES INSTALLED ON THE OVERHEAD SPRINKLER SYSTEM PIPING WILL BE SUPPLIED AND INSTALLED BY FIRE SPRINKLER CONTRACTOR AND WIRED BY ALARM CONTRACTOR.
14. PER PROJECT SPECIFICATIONS, IF DESIGN OR MATERIALS DIFFER FROM THAT SPECIFIED HEREIN, SUPPLEMENTAL ENGINEERING DESIGN, SUBMITTAL, AND REVIEW SHALL BE REQUIRED.

GENERAL INSTALLATION REQUIREMENTS:
1. OVERHEAD FIRE SPRINKLER PIPING SHALL BE AS FOLLOWS (UNLESS NOTED OTHERWISE ON PLANS):
a. PIPING 2-1/2" AND LARGER SHALL BE SCH.10 BLACK STEEL WITH ROLLED FITTINGS, RISER TO BE SCH.10 BLACK STEEL PIPE.
b. PIPING 2" AND LESS SHALL BE SCH.40 BLACK STEEL.
c. DRAINAGE PIPING 2" OR SMALLER, DOWNSTREAM OF THE DRAIN VALVE SHALL BE SCH. 40 BLACK STEEL WITH ROLLED FITTINGS.
2. WHERE APPLICABLE IN UNOBSTRUCTED CONSTRUCTION CONDITIONS (AS DEFINED PER NFPA 13 §3.7.2); PER NFPA 13 (2016) §8.6.6.1.1, THE DISTANCE BETWEEN THE SPRINKLER DEFLECTOR AND THE CEILING SHALL BE A MINIMUM OF 1-INCH AND A MAXIMUM OF 12-INCHES THROUGHOUT THE AREA OF COVERAGE OF THE SPRINKLER.
3. WHERE APPLICABLE IN OBSTRUCTION CONSTRUCTION CONDITIONS (AS DEFINED PER NFPA 13 §3.7.1); PER NFPA 13 (2016) §8.6.4.1.2, SPRINKLER DEFLECTORS SHALL BE INSTALLED WITHIN THE DEFLECTORS WITHIN THE HORIZONTAL PLANES OF 1-INCH TO 6-INCHES BELOW THE STRUCTURAL MEMBERS AND A MAXIMUM DISTANCE OF 22-INCHES FROM THE CEILING/ROOF DECK.
4. PER NFPA 13 (2016) §8.3.1.3 UPRIGHT SPRINKLERS SHALL BE INSTALLED WITH THE FRAME ARMS PARALLEL TO THE BRANCH LINE, UNLESS SPECIFICALLY LISTED FOR OTHER ORIENTATION.
5. PER NFPA 13 (2016) §8.5.4.2 DEFLECTORS OF SPRINKLERS SHALL BE ALIGNED PARALLEL TO CEILINGS, ROOFS, OR THE INCLINE OF STAIRS.
6. PER NFPA 13 (2016) §8.15.1.1 CONCEALED SPACES OF EXPOSED COMBUSTIBLE CONSTRUCTION SHALL BE PROTECTED BY SPRINKLERS EXCEPT IN CONCEALED SPACES WHERE SPRINKLERS ARE NOT REQUIRED TO BE INSTALLED BY 8.15.1.2.1 THROUGH 8.15.1.2.18 AND 8.15.6.
7. PER NFPA 13 (2016) 8.15.1.2.1 CONCEALED SPACES OF NONCOMBUSTIBLE WITH MINIMAL COMBUSTIBLE LOADING HAVING NO ACCESS SHALL NOT REQUIRE SPRINKLER PROTECTION.
8. PER NFPA 13 (2100) 8.15.1.2.3 CONCEALED SPACES FORMED BY STUDS OR JOISTS WITH LESS THAN 6-INCHES BETWEEN THE INSIDE OR NEAR EDGES OF THE STUDS OR JOISTS SHALL NOT REQUIRE SPRINKLER PROTECTION.
9. PER NFPA 13 (2016) 8.15.1.2.7 CONCEALED SPACES FILLED WITH NONCOMBUSTIBLE INSULATION SHALL NOT REQUIRE SPRINKLER PROTECTION; MAXIMUM 2-INCH AIR GAP AT THE TOP OFTHE SPACE SHALL BE PERMITTED.
10. PER NFPA 13 (2016) 8.15.7.3 SPRINKLERS SHALL BE PERMITTED TO BE OMITTED FROM BELOW THE EXTERIOR PROJECTIONS OF COMBUSTIBLE CONSTRUCTION, PROVIDED THE EXPOSED FINISH MATERIAL ON THE EXTERIOR PROJECTIONS ARE NONCOMBUSTIBLE AND THE EXTERIOR PROJECTIONS CONTAIN ONLY SPRINKLERED CONCEALED SPACES OR ANY OF THE FOLLOWING UNSPRINKLERED COMBUSTIBLE CONCEALED SPACES: (1) COMBUSTIBLE CONCEALED SPACES FILLED ENTIRELY WITH NON-COMBUSTIBLE INSULATION, (2) LIGHT OR ORDINARY HAZARD OCCUPANCIES WHERE NONCOMBUSTIBLE OR LIMITED-COMBUSTIBLE CEILINGS ARE DIRECTLY ATTACHED TO THE BOTTOM OF SOLID WOOD JOISTS SO AS TO CREATE ENCLOSED JOIST SPACES 160-FT³ OR LESS IN VOLUME, INCLUDING SPACE BELOW INSULATION THAT IS LAID DIRECTLY ON TOP OR WITHIN THE CEILING JOISTS IN AN OTHERWISE SPRINKLERED ATTIC, OR (3) CONCEALED SPACES OVER ISOLATED SMALL EXTERIOR PROJECTIONS NOT EXCEEDING 55FT² IN AREA.
11. CAGE-TYPE SPRINKLER HEAD GUARDS SHALL BE INSTALLED TO PROTECT ALL SPRINKLERS SUBJECT TO MECHANICAL DAMAGE, INCLUDING ALL NON-CONCEALED PENDENT SPRINKLER BELOW 8-FEET ABOVE FINISH FLOOR OR EXPOSED UPRIGHTS AND PENDENT SPRINKLER INSTALLED DIRECTLY ON PIPING WITHIN A GYMNASIUM AREA.
12. ALL HANGERS, BRACES, AND RESTRAINTS SHALL BE INSTALLED IN ACCORDANCE WITH NFPA 13 (2016 CALIFORNIA EDITION), CBC/CFC (2016), CITY OF FRESNO FIRE PREVENTION.
13. PER NFPA 13 (2016) §9.3.6.5 BRANCH LINE RESTRAINT SHALL NOT BE REQUIRED WHERE BRANCH LINES ARE SUPPORTED BY RODS LESS THAN 6" IN LENGTH WHEN MEASURED BETWEEN THE TOP OF THE PIPE TO THE POINT OF ATTACHMENT TO THE BUILDING STRUCTURE.

⚠1 "FOR REFERENCE ONLY"

LICENSED ARCHITECT JUSTIN DOUGLAS MURATORE NO. C38020 RENEWAL: 8/23 STATE OF CALIFORNIA
MURATORE ASSOCIATES
2897 W ROBINWOOD LN
FRESNO, CA 93711
559/265-6534
info@muratoreassociates.com

CONSULTANT STAMP

FIRE SYSTEM SOLUTIONS, INC.
LIC. C-16, 982763
4277 W. RICHERT AVE. STE. 103
FRESNO, CALIFORNIA
(559) 275-4894
LICENSED FIRE PROTECTION CONTRACTOR FIRE SYSTEM SOLUTIONS C-16 C-10 LIC. # 982763 FIRE SPRINKLER STATE OF CALIFORNIA

CWBSP-21-53
NICET# 154984

APPROVED
AUG 23 2024 AJ
FRESNO FIRE DEPARTMENT

REVISION TABLE:

REV.	DESCRIPTION	DATE
1	PC COMMENTS	05-18-2024

DATE: 11/11/2022
SCALE: As indicated
JOB NUMBER:

ADDRESS:
BRIX & MERCER BLDGS
1221 FULTON ST
FRESNO, CA 93721

AHJ #: 21-1137

PROJECT:
FRESNO COUNTY DEPT. OF PUBLIC HEALTH BASEMENT RENOVATION

SHEET TITLE:
MERCER BUILDING FIRE SPRINKLER PIPING PLAN

SHEET NUMBER
FP2.0

FILE PATH: P:\1 Work\Customers\County of Fresno\081-Brix Mercer Basement\Design Documents\Drawings\Working\081-Dwg-Brix Mercer Basement.rvt
8/26/2021 6:21:19 PM

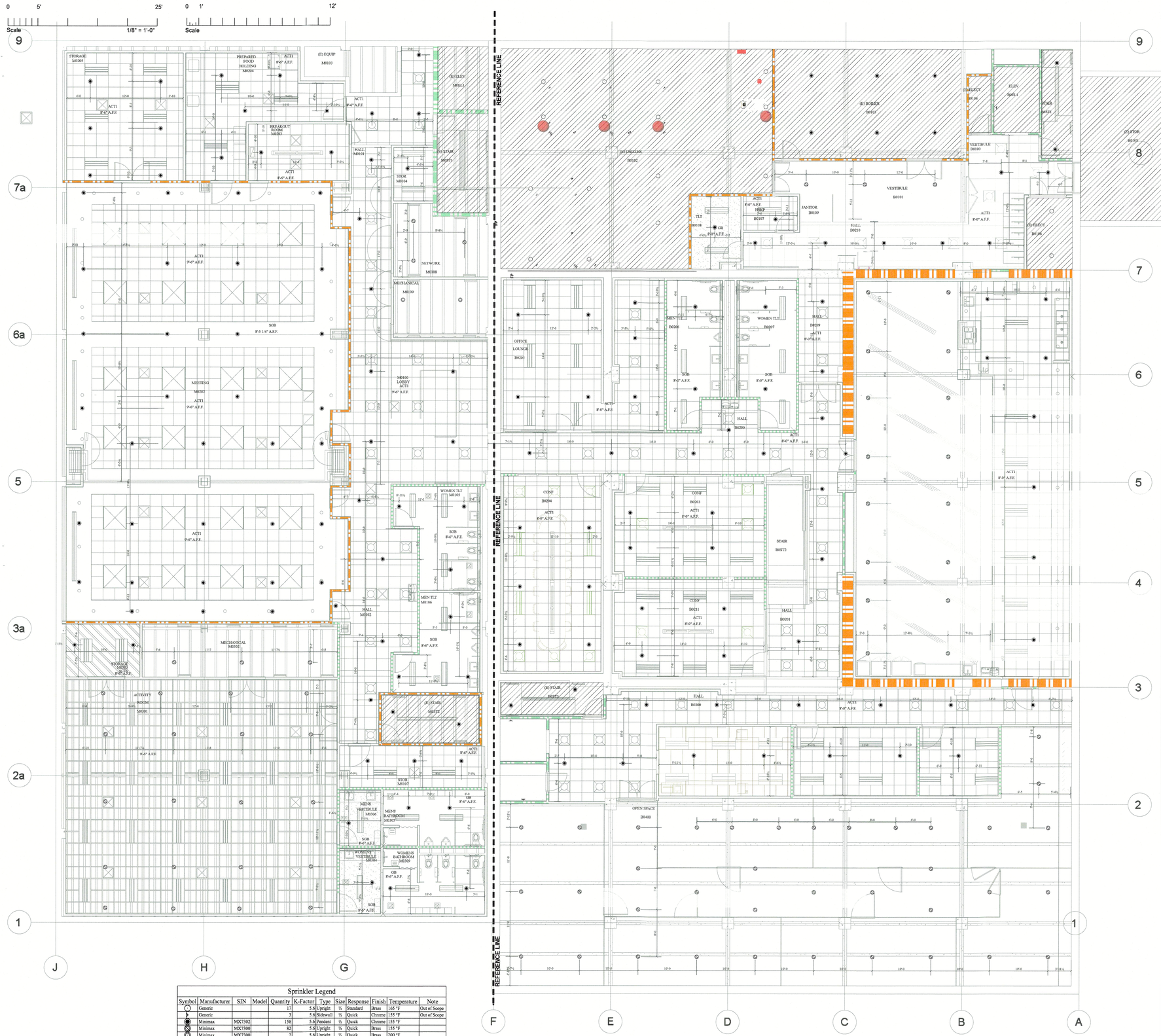

Sprinkler Legend										
Symbol	Manufacturer	SIN	Model	Quantity	K-Factor	Type	Size	Response	Finish	Temperature	Note
	Generic			17	5.6	Upright	½	Standard	Brass	155 °F	Out of Scope
	Generic			3	5.6	Sidewall	½	Quick	Chrome	155 °F	Out of Scope
	Minimax	MX7302		158	5.6	Pendent	½	Quick	Chrome	155 °F	
	Minimax	MX7300		82	5.6	Upright	½	Quick	Brass	155 °F	
	Minimax	MX7300		2	5.6	Upright	½	Quick	Brass	200 °F	
				Total = 262							

BRIX MERCER BUILDING FIRE SPRINKLER LAYOUT PLAN

SCALE 1/8" = 1'

Sprinkler Components Legend

- FLEXIBLE GROOVED COUPLING
- PIPING W/ GROVED FITTINGS
- PIPING W/ THREADED FITTINGS
- PIPING W/ PENDENT SPRINKLER (Varies - See Details)
- PIPING W/ UPRIGHT SPRINKLER (Varies - See Details)
- HYDRAULIC NODE REF
- (EXISTING) PIPING
- (DEMO) PIPING
- (NEW) PIPING
- FIRE PENETRATION THRU RATED WALL

Sprinkler Brace / Hanger Legend

Symbol	Description	Detail Reference
	LATERAL SEISMIC BRACE (Perpindicular)	Sheet(s) FP2.0
	LONGITUDINAL SEISMIC BRACE (Parallel)	Sheet(s) FP2.0
	4-WAY SEISMIC BRACE (Parallel / Perpindicular)	Sheet(s) FP2.0
	END OF LINE RESTRAINT	Sheet(s) FP1.0
	PIPE HANGER	Sheet(s) FP1.0-2.0

SPRINKLER SYSTEM DESIGN CRITERIA:
1. SYSTEM SHALL BE DESIGNED TO CONFORM WITH NFPA 13 (2016 CALIFORNIA EDITION), CFC/CBC (2016), CITY OF FRESNO FIRE PREVENTION STANDARDS.
2. BRIX BUILDING - OBSTRUCTED CONCRETE TEE CONSTRUCTION.
MERCER BUILDING - UNOBSTRUCTED METAL WEB JOIST CONSTRUCTION.
3. FIRE SPRINKLER SYSTEM POINT OF CONNECTION AT EXISTING OVERHEAD SPRINKLER SYSTEM.
4. SPRINKLER DISCHARGE DENSITY FOR THIS PROJECT SHALL BE IN ACCORDANCE WITH NFPA 13 (2016) §11.2.1.2.4 WITH DENSITY CURVES IN ACCORDANCE WITH FIG. 11.2.3.1.1.
a. LIGHT HAZARD OCCUPANCY SHALL INCLUDE ALL OFFICE, CORRIDOR, DINING, CONCEALED ATTIC SPACES, RESTROOMS, AND SIMILAR AREAS. LIGHT HAZARD OCCUPANCY SHALL HAVE A DESIGN DENSITY OF 0.10 GPM/FT² OVER A MINIMUM REMOTE AREA OF 1500 FT². THE MAXIMUM ALLOWABLE PROTECTION AREA OF COVERAGE FOR A SPRINKLER SHALL BE IN ACCORDANCE WITH THE VALUE INDICATED IN TABLE 8.6.2.2.1(a) AND SHALL NOT EXCEED 225FT².
b. ORDINARY HAZARD GROUP 1 (OH1) SHALL FOOD SERVICE AREAS, ELECTRICAL AND MECHANICAL EQUIPMENT ROOMS, PORTE COCHERES, AND SIMILAR AREAS INDICATED IN NFPA 13 (2016) §A.5.3.1. OH1 OCCUPANCY SHALL HAVE A DENSITY OF 0.15GPM/FT² OVER A MINIMUM REMOTE AREA OF 1500 FT². THE MAXIMUM ALLOWABLE PROTECTION AREA OF COVERAGE FOR A SPRINKLER SHALL BE IN ACCORDANCE WITH THE VALUE INDICATED IN TABLE 8.6.2.2.1(b) – 130FT².
c. ORDINARY HAZARD GROUP 2 (OH2) SHALL INCLUDE AUTOMOTIVE WORKSHOP AREAS, SCIENCE LABRATORIES, STAGES, STORAGE ROOMS, SIMILAR AREAS INDICATED IN NFPA 13 (2016) A.5.3.2. OH2 OCCUPANCY SHALL HAVE A DESIGN DENSITY OF 0.20GPM/FT² OVER A MINIMUM REMOTE AREA OF 1500FT². THE MAXIMUM ALLOWABLE PROTECTION AREA OF COVERAGE FOR A SPRINKLER SHALL BE IN ACCORDANCE WITH THE VALUE INDICATED IN TABLE 8.6.2.2.1(b) – 130FT².
5. MAXIMUM SPRINKLER SPACING SHALL NOT EXCEED 15'-0" ON CENTER, UNLESS SPECIFICALLY LISTED BY THE SPRINKLER MANUFACTURER.
6. HOSE STREAM ALLOWANCE GPM FLOW SHALL BE IN ACCORDANCE WITH THE VALUES INDICATED IN TABLE 11.2.3.1.2:
LIGHT HAZARD – 100 GPM; ORD HAZARD – 250 GPM.
7. PER NFPA 13 (2016) §11.2.3.2.3, WHERE LISTED QUICK-RESPONSE SPRINKLERS ARE USED THROUGHOUT A SYSTEM OR PORTION OF A SYSTEM HAVING THE SAME HYDRAULIC DESIGN BASIS, THE SYSTEM AREA OF OPERATION SHALL BEPERMITTED TO BE REDUCED WITHOUT REVISING THE DENSITY AS INDICATED IN FIG. 11.2.3.2.3.1. NOTE: REMOTE AREA REDUCTION EXCLUDES EXTENDED COVERAGE SPRINKLER HEADS AND ONLY APPLICABLE TO LIGHT HAZARD OCCUPANCY ONLY.
8. PER NFPA 13 (2016) §11.2.3.2.4, THE SYSTEM REMOTE AREA SHALL BE INCREASED BY 30% WITHOUT REVISING THE DENSITY WHEN SPRAY SPRINKLERS AND CMSA SPRINKLERS ARE USED ON SLOPED CEILINGS WITH A PITCH EXCEEDING 1 IN 6 (A RISE OF 2 UNITS IN A RUN OF 12 UNITS) IN NON-STORAGE APPLICATIONS.
9. PER NFPA 13 (2016) §11.2.3.2.7.1, MULTIPLE ADJUSTMENTS CAN BE MADE TO THE REMOTE AREA WHEN BOTH QUICK RESPONSE SPRINKLER AREA REDUCTIONS AND SLOPED CEILING AREA INCREASE ARE APPLICABLE.
10. THE HYDRAULIC CALCULATION SOURCE SHALL BE TO THE FLOW TEST HYDRANT OR APPLICABLE STREET CONNECTION, ACCORDING TO LOCAL FIRE PREVENTION DISTRICT WATER CURVE DETERMINATIONS AND OR TESTING PROCEDURES. REFER TO SITE PLAN AND HYDRAULIC CALCULATIONS.
11. STORAGE HEIGHT SHALL NOT EXCEED 8-FEET.
12. MICROBIAL INDUCED CORROSION WILL NOT BE A FACTOR FOR THIS SYSTEM.
13. THE FIRE SPRINKLER ALARM SYSTEM SHALL BE DESIGNED, INSTALLED AND PERMITTED BY OTHERS, AND IS NOT IN THE SCOPE OF WORK. SUPERVISORY FLOW DETECTORS AND TAMPER RESISTANT VALVES INSTALLED ON THE OVERHEAD SPRINKLER SYSTEM PIPING WILL BE SUPPLIED AND INSTALLED BY FIRE SPRINKLER CONTRACTOR AND WIRED BY ALARM CONTRACTOR.
14. PER PROJECT SPECIFICATIONS, IF DESIGN OR MATERIALS DIFFER FROM THAT SPECIFIED HEREIN, SUPPLEMENTAL ENGINEERING DESIGN, SUBMITTAL, AND REVIEW SHALL BE REQUIRED.

GENERAL INSTALLATION REQUIREMENTS:
1. OVERHEAD FIRE SPRINKLER PIPING SHALL BE AS FOLLOWS (UNLESS NOTED OTHERWISE ON PLANS):
a. PIPING 2-1/2" AND LARGER SHALL BE SCH.10 BLACK STEEL WITH ROLLED FITTINGS, RISER TO BE SCH.10 BLACK STEEL PIPE.
b. PIPING 2" AND LESS SHALL BE SCH.40 BLACK STEEL.
c. DRAINAGE PIPING 2" OR SMALLER, DOWNSTREAM OF THE DRAIN VALVE SHALL BE SCH. 40 BLACK STEEL WITH ROLLED FITTINGS.
2. WHERE APPLICABLE IN UNOBSTRUCTED CONSTRUCTION CONDITIONS (AS DEFINED PER NFPA 13 §3.7.2); PER NFPA 13 (2016) §8.6.4.1.1, THE DISTANCE BETWEEN THE SPRINKLER DEFLECTOR AND THE CEILING SHALL BE A MINIMUM OF 1-INCH AND A MAXIMUM OF 12-INCHES THROUGHOUT THE AREA OF COVERAGE OF THE SPRINKLER.
3. WHERE APPLICABLE IN OBSTRUCTION CONSTRUCTION CONDITIONS (AS DEFINED PER NFPA 13 §3.7.1); PER NFPA 13 (2016) §8.6.4.1.2, SPRINKLER DEFLECTORS SHALL BE INSTALLED WITH THE DEFLECTORS WITHIN THE HORIZONTAL PLANES OF 1-INCH TO 6-INCHES BELOW THE STRUCTURAL MEMBERS AND A MAXIMUM DISTANCE OF 22-INCHES FROM THE CEILING/ROOF DECK.
4. PER NFPA 13 (2016) §8.3.1.3 UPRIGHT SPRINKLERS SHALL BE INSTALLED WITH THE FRAME ARMS PARALLEL TO THE BRANCH LINE, UNLESS SPECIFICALLY LISTED FOR OTHER ORIENTATION.
5. PER NFPA 13 (2016) §8.5.4.2 DEFLECTORS OF SPRINKLERS SHALL BE ALIGNED PARALLEL TO CEILINGS, ROOFS, OR THE INCLINE OF STAIRS.
6. PER NFPA 13 (2016) §8.15.1.1 CONCEALED SPACES OF EXPOSED COMBUSTIBLE CONSTRUCTION SHALL BE PROTECTED BY SPRINKLERS EXCEPT IN CONCEALED SPACES WHERE SPRINKLERS ARE NOT REQUIRED TO BE INSTALLED BY 8.15.1.2.1 THROUGH 8.15.1.2.18 AND 8.15.6.
7. PER NFPA 13 (2016) 8.15.1.2.1 CONCEALED SPACES OF NONCOMBUSTIBLE WITH MINIMAL COMBUSTIBLE LOADING HAVING NO ACCESS SHALL NOT REQUIRE SPRINKLER PROTECTION.
8. PER NFPA 13 (2106) 8.15.1.2.3 CONCEALED SPACES FORMED BY STUDS OR JOISTS WITH LESS THAN 6-INCHES BETWEEN THE INSIDE OR NEAR EDGES OF THE STUDS OR JOISTS SHALL NOT REQUIRE SPRINKLER PROTECTION.
9. PER NFPA 13 (2016) 8.15.1.2.7 CONCEALED SPACES FILLED WITH NONCOMBUSTIBLE INSULATION SHALL NOT REQUIRE SPRINKLER PROTECTION: MAXIMUM 2-INCH AIR GAP AT THE TOP OFTHE SPACE SHALL BE PERMITTED.
10. PER NFPA 13 (2016) 8.15.7.3 SPRINKLERS SHALL BE PERMITTED TO BE OMITTED FROM BELOW THE EXTERIOR PROJECTIONS OF COMBUSTIBLE CONSTRUCTION, PROVIDED THE EXPOSED FINISH MATERIAL ON THE EXTERIOR PROJECTIONS ARE NON-COMBUSTIBLE AND THE EXTERIOR PROJECTIONS CONTAIN ONLY SPRINKLERED CONCEALED SPACES OR ANY OF THE FOLLOWING UNSPRINKLERED COMBUSTIBLE CONCEALED SPACES: (1) COMBUSTIBLE CONCEALED SPACES FILLED ENTIRELY WITH NON-COMBUSTIBLE INSULATION, (2) LIGHT OR ORDINARY HAZARD OCCUPANCIES WHERE NONCOMBUSTIBLE OR LIMITED-COMBUSTIBLE CEILINGS ARE DIRECTLY ATTACHED TO THE BOTTOM OF SOLID WOOD JOISTS SO AS TO CREATE ENCLOSED JOIST SPACES 160-FT³ OR LESS IN VOLUME, INCLUDING SPACE BELOW INSULATION THAT IS LAID DIRECTLY ON TOP OR WITHIN THE CEILING JOISTS IN AN OTHERWISE SPRINKLERED ATTIC, OR (3) CONCEALED SPACES OVER ISOLATED SMALL EXTERIOR PROJECTIONS NOT EXCEEDING 55FT² IN AREA.
11. CAGE-TYPE SPRINKLER HEAD GUARDS SHALL BE INSTALLED TO PROTECT ALL SPRINKLERS SUBJECT TO MECHANICAL DAMAGE, INCLUDING ALL NON-CONCEALED PENDENT SPRINKLER BELOW 8.FEET ABOVE FINISH FLOOR OR EXPOSED UPRIGHTS AND PENDENT SPRINKLER INSTALLED DIRECTLY ON PIPING WITHIN A GYMNASIUM AREA.
12. ALL HANGERS, BRACES, AND RESTRAINTS SHALL BE INSTALLED IN ACCORDANCE WITH NFPA 13 (2016 CALIFORNIA EDITION), CBC/CFC (2016), CITY OF FRESNO FIRE PREVENTION.
13. PER NFPA 13 (2016) §9.3.6.5 BRANCH LINE RESTRAINT SHALL NOT BE REQUIRED WHERE BRANCH LINES ARE SUPPORTED BY RODS LESS THAN 6" IN LENGTH WHEN MEASURED BETWEEN THE TOP OF THE PIPE TO THE POINT OF ATTACHMENT TO THE BUILDING STRUCTURE.

⚠ "FOR REFERENCE ONLY"

LICENSED ARCHITECT JUSTIN DOUGLAS MURATORE NO. C38020 RENEWAL: 8/23 STATE OF CALIFORNIA

MURATORE ASSOCIATES
2897 W ROBINWOOD LN
FRESNO, CA 93711
559/265-6834
info@muratoreassociates.com

CONSULTANT STAMP

FIRE SYSTEM SOLUTIONS, INC.
LIC. C-16, 982763
4277 W. RICHERT AVE. STE. 103
FRESNO, CALIFORNIA
(559) 275-4894

LICENSED FIRE PROTECTION CONTRACTOR FIRE SYSTEM SOLUTIONS C-16 C-10 LIC. # 982763 FIRE SPRINKLER STATE OF CALIFORNIA

CWBSP-21-53
NICET# 154984

APPROVED
AUG 20 2024
FRESNO FIRE DEPARTMENT

REVISION TABLE:

REV.	DESCRIPTION	DATE
1	PC COMMENTS	05-16-2024

DATE: 11/11/2022
SCALE: As indicated
JOB NUMBER:

ADDRESS:
BRIX & MERCER BLDGS
1221 FULTON ST
FRESNO, CA 93721

AHJ #: 21-1137

PROJECT:
FRESNO COUNTY DEPT. OF PUBLIC HEALTH BASEMENT RENOVATION

SHEET TITLE:
BRIX MERCER BUILDING FIRE SPRINKLER LAYOUT PLAN

SHEET NUMBER
FP3.0

8/26/2021 6:21:13 PM
FILE PATH: P:\21-1044\Customer\County of Fresno\BH Bric Mercer Basement\Design Documents\Drawings\Working\BH Design Bric Mercer Basement.rvt

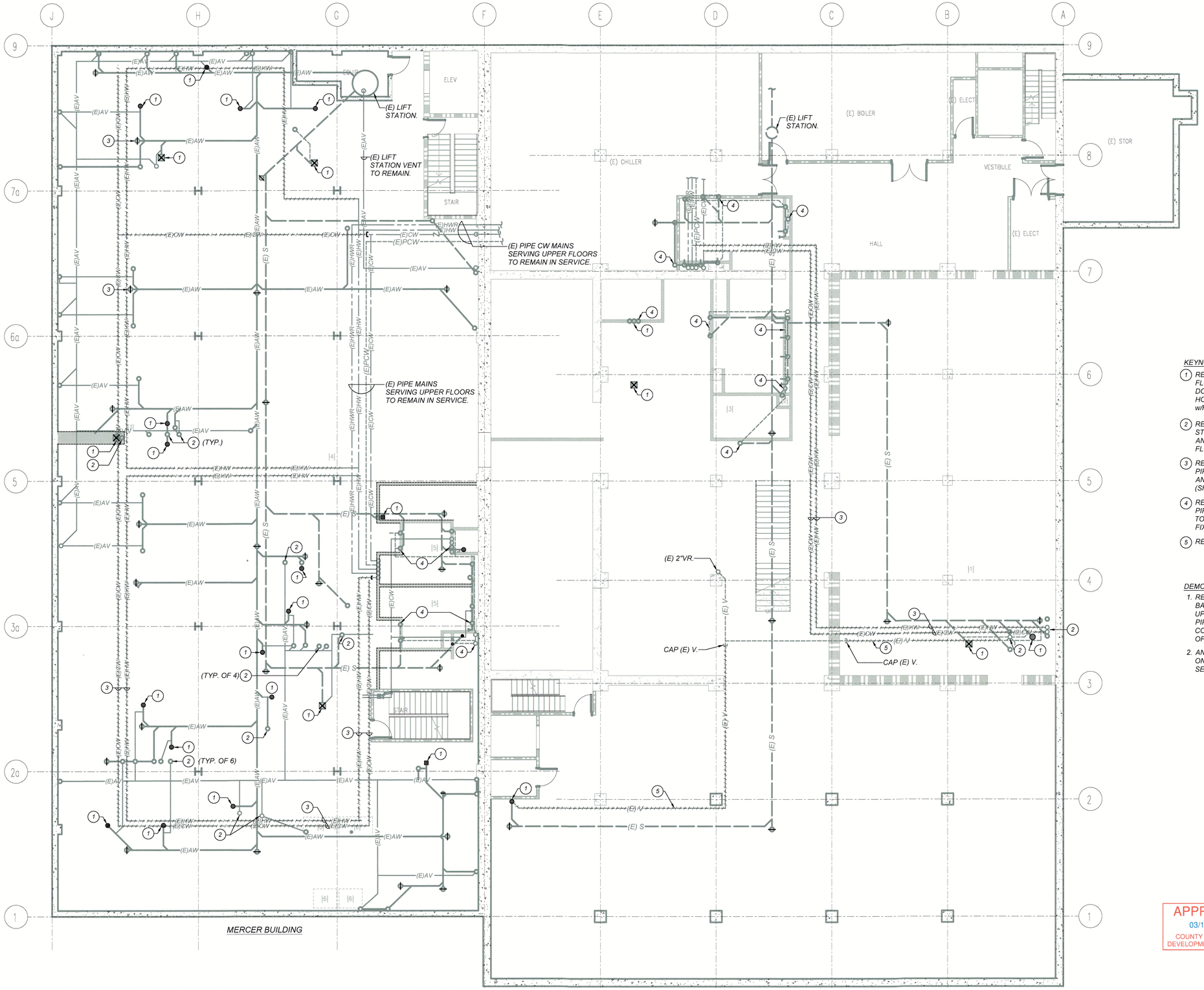

BASEMENT DEMO PLUMBING PLAN

SCALE: 1/8"=1'-0"

KEYNOTES:

1. *REMOVE (E) FLOOR DRAIN (OR FLOOR SINK) GRATE GRIND RIM DOWN FLUSH w/FLOOR AND FILL HOLE w/GROUT. TROWEL FLUSH w/FINISHED FLOOR.*
2. *REMOVE (E) PLUMBING PIPES STUBBED UP THRU FLOOR SLAB AND CAP (E) PIPING BELOW FINISH FLOOR.*
3. *REMOVE ALL (E) HW, HWR & CW PIPING & SUPPORTS OVERHEAD AND CAP BACK AT MAIN RISERS (SHOWN CROSS-HATCHED)*
4. *REMOVE ALL (E) CW, HW, S, V PIPING ABOVE FLOOR FROM (E) TOILET ROOMS & REMOVE ALL (E) FIXTUR SUPPORT CARRIERS.*
5. *REMOVE (E) V PIPING & SUPPORTS.*

DEMO NOTES:

1. *REMOVE ALL EXISTING PIPING IN BASEMENT THAT DOES NOT SERVE THE UPPER FLOOR LEVELS. NOT ALL (E) PIPING TO BE REMOVED IS SHOWN. CONTRACTOR SHALL VERIFY EXTENT OF PIPING DEMOLITION.*
2. *ANY (E) PIPING THAT SERVES FIXTURES ON UPPER FLOORS SHALL REMAIN IN SERVICE.*

APPROVED
03/17/2023
COUNTY OF FRESNO
DEVELOPMENT SERVICES

THE COUNTY OF FRESNO 1856

LICENSED ARCHITECT
JUSTIN DOUGLAS MURATORE
NO. C38020
RENEWAL: 8/29
STATE OF CALIFORNIA

MURATORE ASSOCIATES
1222 N SHAW AVE.
FRESNO, CA 93711
559-369-6934
info@muratoreassociates.com

CONSULTANT STAMP

REGISTERED PROFESSIONAL ENGINEER
THOMAS D. CAMPBELL
M23588
MECHANICAL
EXP. 9-30-2023
STATE OF CALIFORNIA

LAWRENCE ENGINEERING GROUP
7084 N. Maple Ave., Suite 101
(559) 431-0101
21003
Fresno, CA 93720
FAX (559) 431-1362

APPROVED
AUG 23 2024
FRESNO FIRE DEPARTMENT

REVISION TABLE:

REV.	DESCRIPTION	DATE

DATE: 11/15/2022
SCALE: As indicated
JOB NUMBER:

ADDRESS:

BRIX & MERCER BLDGS
1221 FULTON ST
FRESNO, CA 93721

AHJ #: 21-1137 21-105379

PROJECT:

FRESNO COUNTY DEPT. OF PUBLIC HEALTH BASEMENT RENOVATION

SHEET TITLE:

BASEMENT DEMO PLUMBING PLAN

SHEET NUMBER

P1.01

FILE PATH:

INTERNAL NUMBER: 829

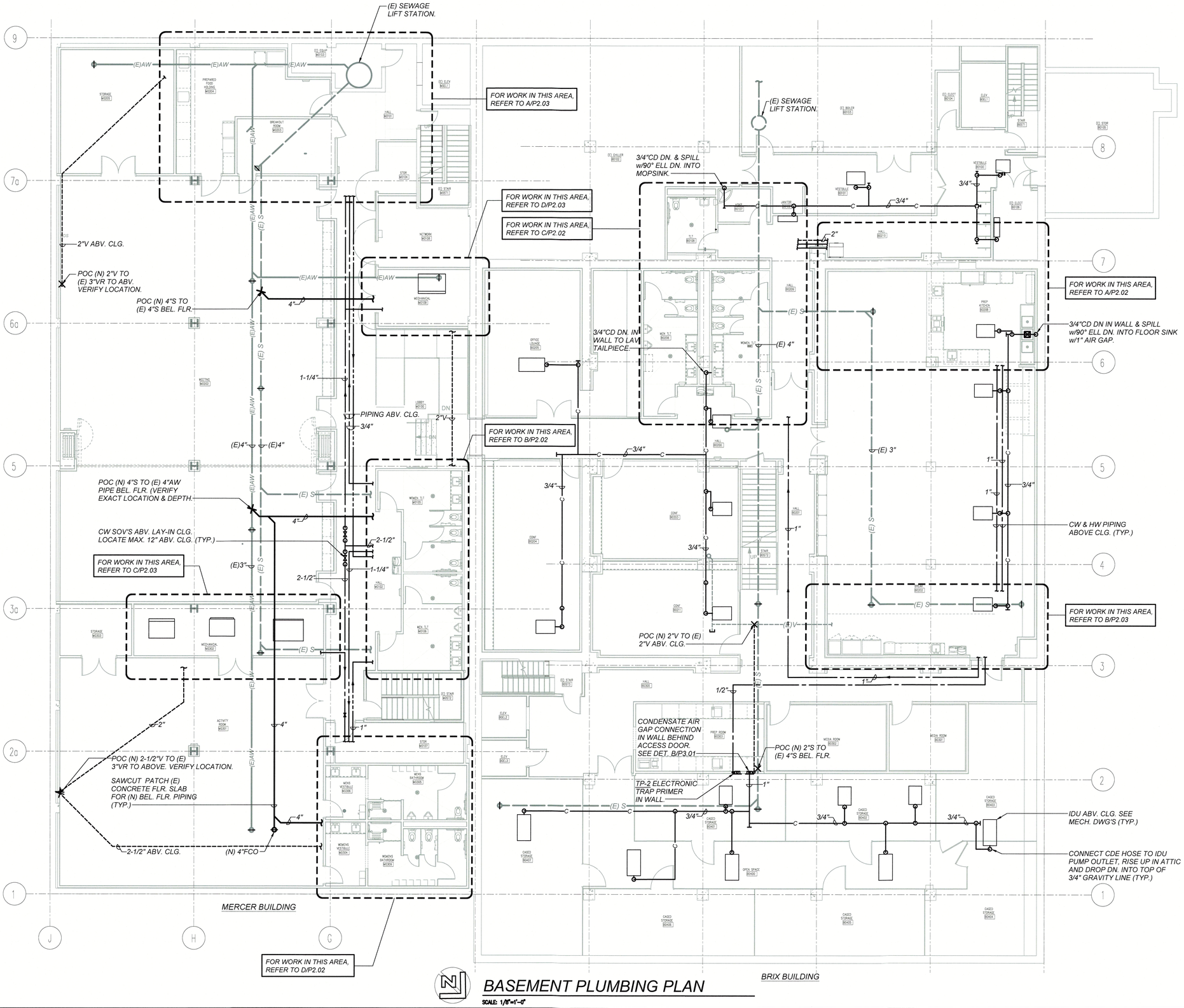

BASEMENT PLUMBING PLAN

SCALE: 1/8"=1'-0"

THE COUNTY OF FRESNO 1856

LICENSED ARCHITECT
JUSTIN DOUGLAS MURATORE
NO. C38020
RENEWAL 8/23
STATE OF CALIFORNIA

MURATORE ASSOCIATES
1222 N SHAW AVE.
FRESNO, CA 93711
559-369-6834
info@muratoreassociates.com

CONSULTANT STAMP

REGISTERED PROFESSIONAL ENGINEER
MICHAEL D. CAMPBELL
M23588
REN. 9-30-2023
MECHANICAL
STATE OF CALIFORNIA

LAWRENCE ENGINEERING GROUP
7084 N. Maple Ave., Suite 101
(559) 431-0101
21003
Fresno, CA 93720
FAX (559) 431-1362

APPROVED
AUG 29 2024
FRESNO FIRE DEPARTMENT

REVISION TABLE:

REV.	DESCRIPTION	DATE

DATE: 11/15/2022
SCALE: As indicated
JOB NUMBER:

ADDRESS:

BRIX & MERCER BLDGS
1221 FULTON ST
FRESNO, CA 93721

AHJ #: 21-1137 21-105379

PROJECT:

FRESNO COUNTY DEPT. OF PUBLIC HEALTH BASEMENT RENOVATION

SHEET TITLE:

BASEMENT PLUMBING PLAN

SHEET NUMBER

P2.01

FILE PATH:

INTERNAL NUMBER: 829

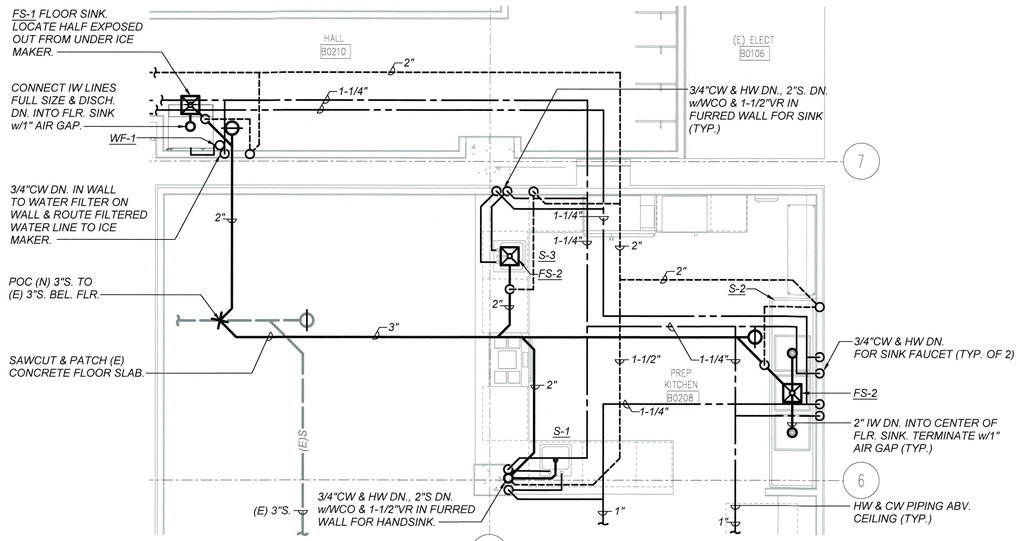

DETAILED PLUMBING PLAN - BRIX BLDG.

A P2.02

SCALE: 1/4"=1'-0"

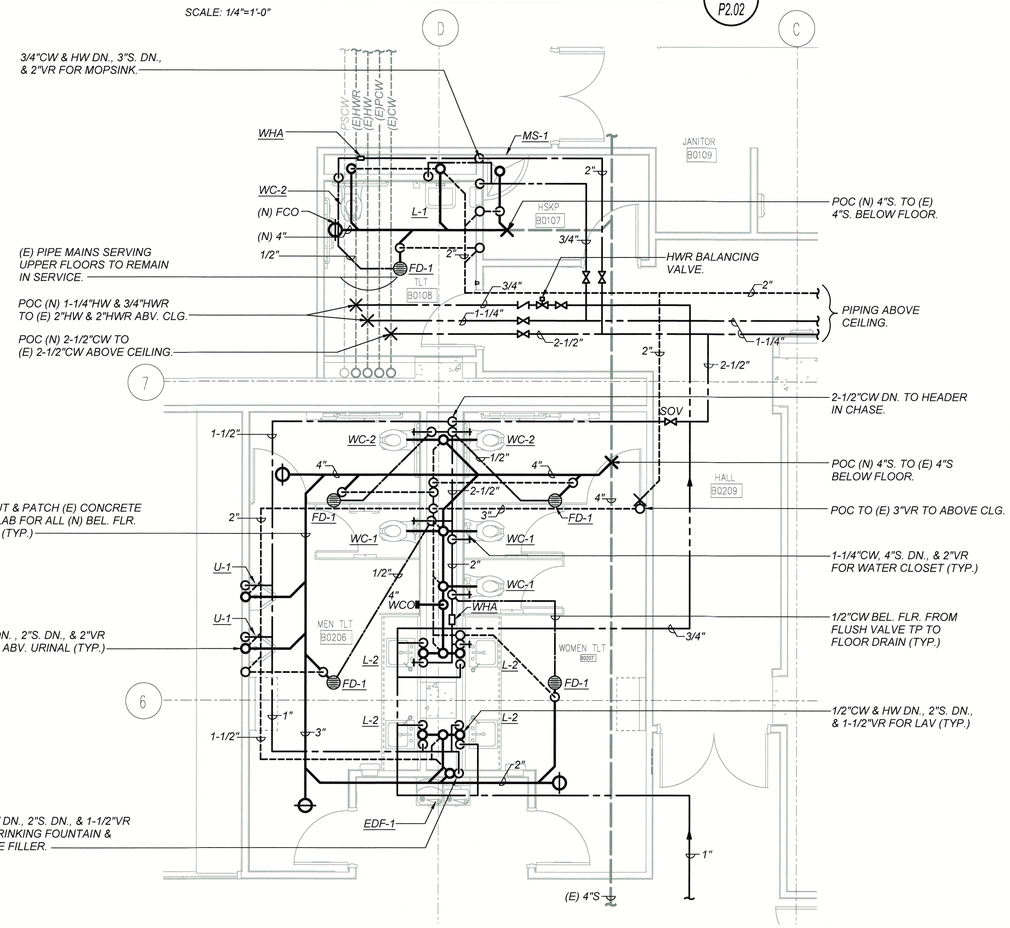

DETAILED PLUMBING PLAN - BRIX BLDG.

C P2.02

SCALE: 1/4"=1'-0"

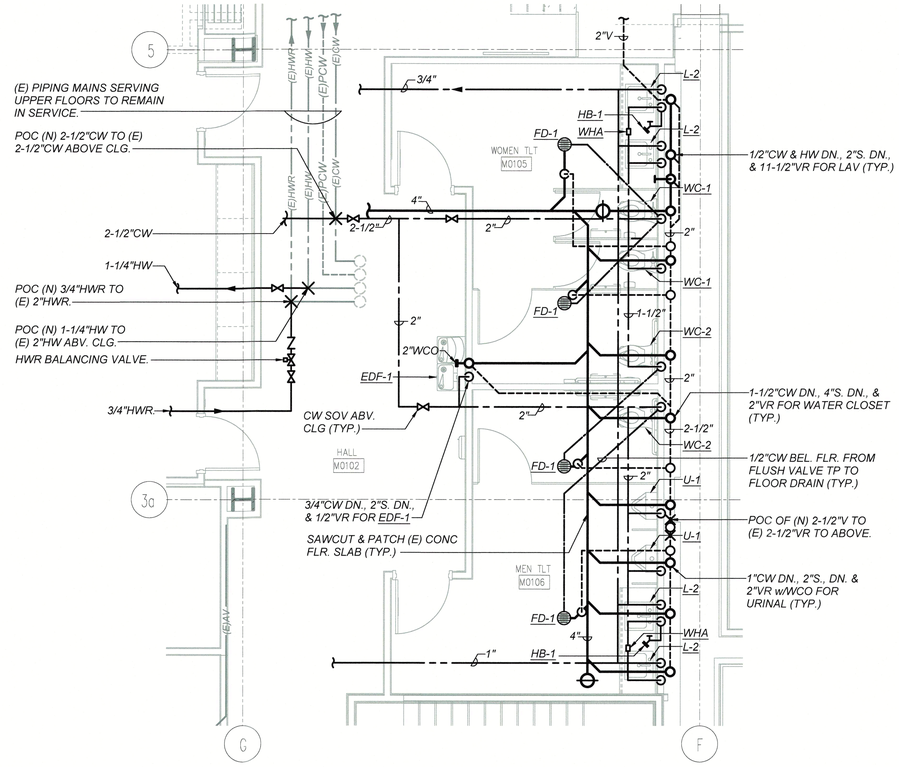

DETAILED PLUMBING PLAN - MERCER BLDG.

B P2.02

SCALE: 1/4"=1'-0"

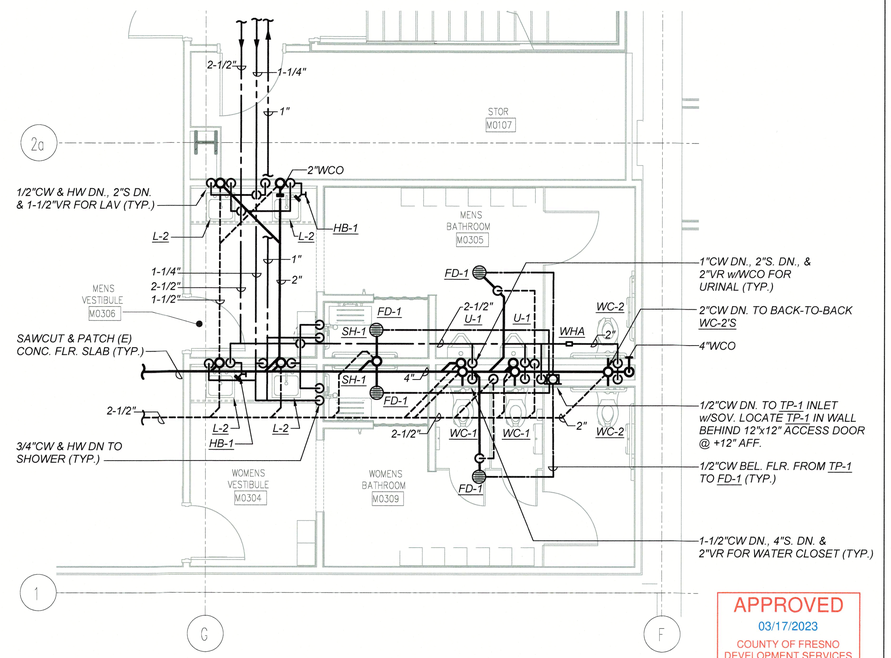

APPROVED
03/17/2023
COUNTY OF FRESNO
DEVELOPMENT SERVICES

DETAILED PLUMBING PLAN - MERCER BLDG.

D P2.02

SCALE: 1/4"=1'-0"

THE COUNTY OF FRESNO 1856

LICENSED ARCHITECT
JUSTIN DOUGLAS YURATORE
NO. C38020
RENEWAL 8/25
STATE OF CALIFORNIA

YURATORE ASSOCIATES
1222 N SHAW AVE
FRESNO, CA 93711
559-326-6634
info@yuratoreassociates.com

CONSULTANT STAMP

REGISTERED PROFESSIONAL ENGINEER
MICHAEL D. CANNEDY
M23588
REN. 9-30-2023
MECHANICAL
STATE OF CALIFORNIA

LAWRENCE ENGINEERING GROUP
7084 N. Maple Ave., Suite 101
(559) 431-0101
Fresno, CA 93720
FAX (559) 431-1362
21003

APPROVED
AUG 29 2024
FRESNO FIRE DEPARTMENT

REVISION TABLE:

REV.	DESCRIPTION	DATE

DATE: 11/15/2022

SCALE: As indicated

JOB NUMBER:

ADDRESS:

BRIX & MERCER BLDGS
1221 FULTON ST
FRESNO, CA 93721

AHJ #: 21-1137 21-105379

PROJECT:

FRESNO COUNTY DEPT. OF PUBLIC HEALTH BASEMENT RENOVATION

SHEET TITLE:

ENLARGED BASEMENT PLUMBING PLANS

SHEET NUMBER

P2.02

FILE PATH:

INTERNAL NUMBER: 529

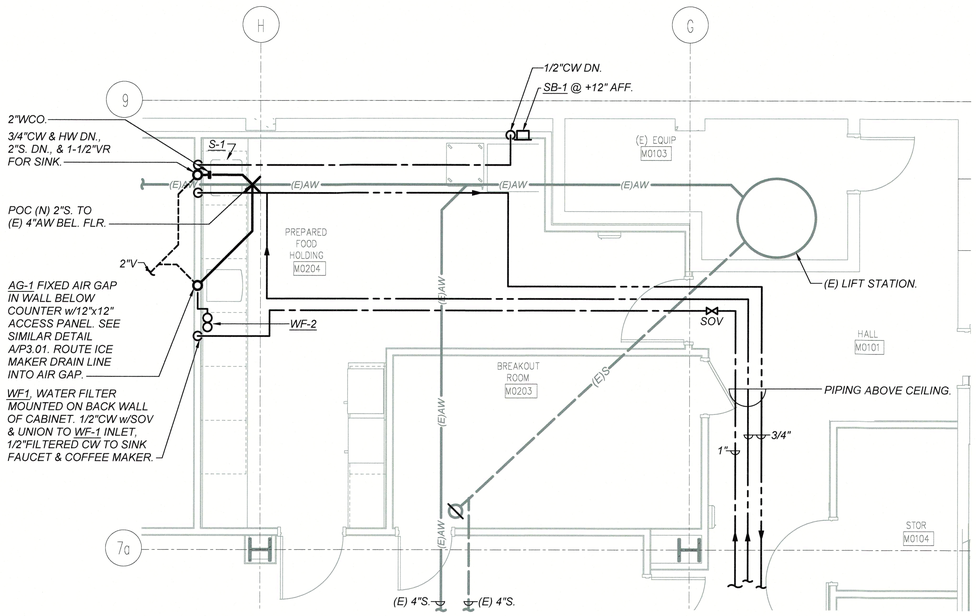

DETAILED PLUMBING PLAN - MERCER BLDG.

A P2.03

SCALE: 1/4"=1'-0"

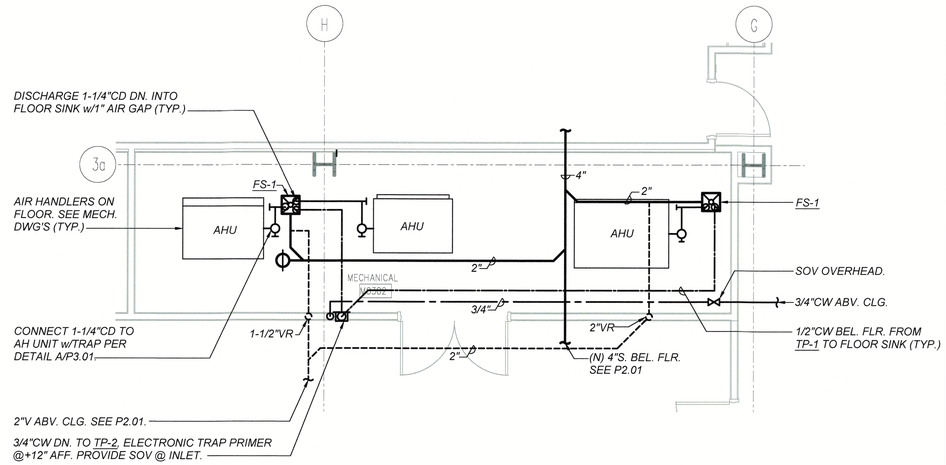

DETAILED PLUMBING PLAN - MERCER BLDG.

C P2.03

SCALE: 1/4"=1'-0"

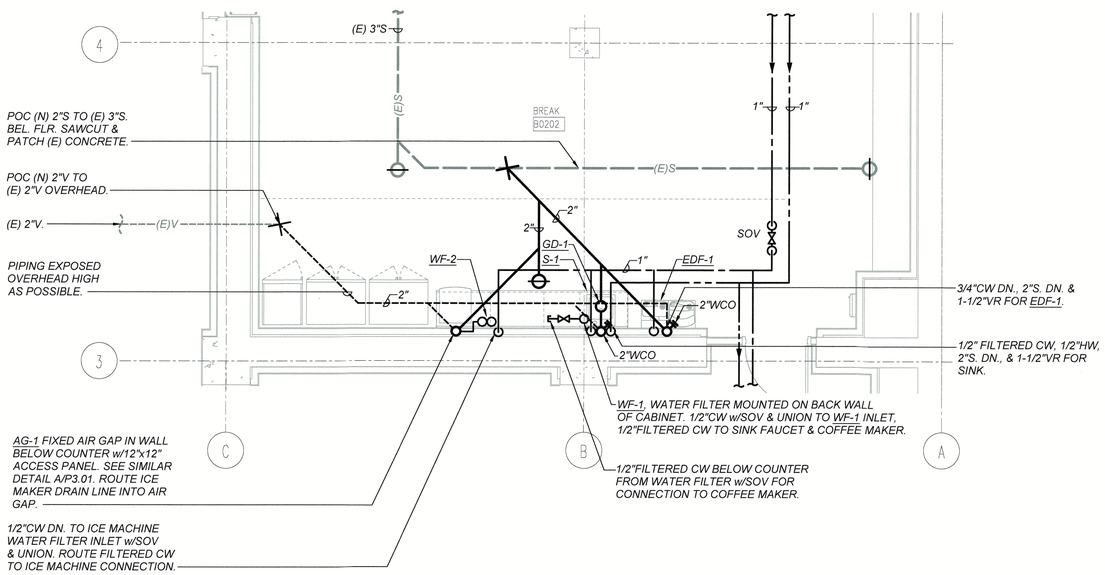

DETAILED PLUMBING PLAN - BRIX BLDG.

B P2.03

SCALE: 1/4"=1'-0"

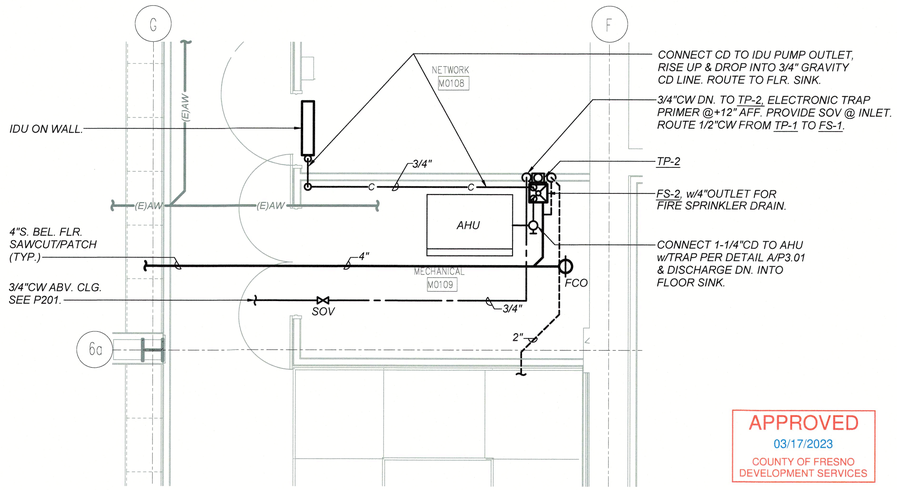

APPROVED
03/17/2023
COUNTY OF FRESNO
DEVELOPMENT SERVICES

DETAILED PLUMBING PLAN - MERCER BLDG.

D P2.03

SCALE: 1/4"=1'-0"

THE COUNTY OF FRESNO 1856

LICENSED ARCHITECT JUSTIN DOUGLAS MURATORE NO. C38020 RENEWAL: 8/25 STATE OF CALIFORNIA

MURATORE ASSOCIATES
1222 W SHAW AVE. FRESNO, CA 93711
559-365-6834
info@muratoreassociates.com

CONSULTANT STAMP

REGISTERED PROFESSIONAL ENGINEER MICHAEL D. CARLSON M23588 REN. 9-30-2023 MECHANICAL STATE OF CALIFORNIA

LAWRENCE ENGINEERING GROUP
7084 N. Maple Ave., Suite 101
(559) 431-0101
21003
Fresno, CA 93720
FAX (559) 431-1362

APPROVED
AUG 29 2024 BY
FRESNO FIRE DEPARTMENT

REVISION TABLE:

REV.	DESCRIPTION	DATE

DATE: 11/15/2022
SCALE: As indicated
JOB NUMBER:

ADDRESS:

BRIX & MERCER BLDGS
1221 FULTON ST
FRESNO, CA 93721

AHJ #: 21-1137 21-105379

PROJECT:

FRESNO COUNTY DEPT. OF PUBLIC HEALTH BASEMENT RENOVATION

SHEET TITLE:

ENLARGED BASEMENT PLUMBING PLANS

SHEET NUMBER

P2.03

FILE PATH:

INTERNAL NUMBER: 829

	PLUMBING LEGEND	
SYMBOL	ITEM	ABBR
———	SOIL or WASTE	S or W
- - - - -	VENT	V
	VENT RISER	VR
	VENT THRU ROOF	VTR
———	DOMESTIC COLD WATER	CW
———	DOMESTIC HOT WATER	HW
———	DOMESTIC HOT WATER RETURN	HWR
—G—	LOW PRESSURE NATURAL GAS	G
—5#G—	5 PSI GAS	5#G
—GSM—	GAS SERVICE MAIN BY THE LOCAL GAS UTILITY	GSM
—C—	CONDENSATE DRAIN	CD
—RWL—	RAIN WATER LEADER	RWL
—OD—	OVERFLOW DRAIN	OD
—SD—	STORM DRAIN	SD
—IW—	INDIRECT WASTE	IW
—F—	FIRE PROTECTION LINE	F
	EXISTING PIPING	(E)
(E)	EXISTING	
(N)	NEW	
	ABOVE CEILING	ABV CLG
	BELOW FLOOR	BEL FLR
	BELOW GRADE	BEL GR
	TYPICAL	TYP
	CONTINUATION	CONT
	DOWN	DN
	FLOOR CLEANOUT	FCO
	CLEANOUT TO GRADE	COTG
	WALL CLEANOUT	WCO
	PIPING TURN UP	
	PIPING TURN DOWN	
	POINT OF CONNECTION	P.O.C
	SHUT-OFF VALVE IN BOX	SOV
	SHUT-OFF VALVE	SOV
	SHUT-OFF VALVE IN RISER	-
	SHUT-OFF VALVE IN DROP	-
	GATE VALVE	-
	BUTTERFLY VALVE	-
	GLOBE VALVE	-
	CHECK VALVE	-
	PLUG VALVE	-
	BALL VALVE	-
	BALANCE COCK	-
	REDUCER	-
	MANHOLE	MH
	FLOW LINE	FL
	UNION	-
	RELIEF VALVE	-
	BALANCING VALVE	-
	PRESSURE GAUGE	-
	THERMOMETER	-
-AW-	ACID WASTE	AW

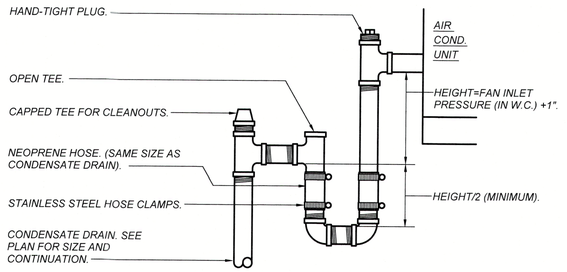

CONDENSATE DRAIN CONNECTION DETAIL — A / P3.01

SCALE: NONE

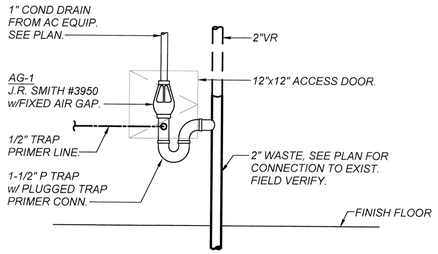

CONDENSATE DRAIN CONNECTION DETAIL — B / P3.01

SCALE: NONE

APPROVED
03/17/2023
COUNTY OF FRESNO
DEVELOPMENT SERVICES

PLUMBING FIXTURE SCHEDULE

WC-1
"KOHLER" K-84325 KINGSTON ULTRA, WALL MOUNTED ELONGATED WATER CLOSET, 1.28 GPF, "CHURCH" #295SSC OPEN-FRONT SEAT WITH CHECK STAINLESS STEEL HINGE POSTS AND FASTENERS AND SELF-SUSTAINING HINGES, LESS COVER, BOLT CAPS, "SLOAN ROYAL" #111-1.28 (OR #111-1.28-TP WITH TRAP PRIMER CONNECTION WHERE SHOWN ON DRAWINGS) MANUAL LEVER FLUSH VALVE, (1.28 GALLONS/FLUSH), , "JAY R. SMITH" SERIES #410 COMPACT VERTICAL SUPPORT CARRIER, SEE ARCHITECTURAL DRAWINGS FOR MOUNTING HEIGHTS, 1" C.W., 4" S., 2" V.
WC-2
"KOHLER" #K-84325 KINGSON ULTRA, ACCESSIBLE WALL MOUNTED ELONGATED WATER CLOSET ,1.28 GPF, "CHURCH" #295SSC OPEN-FRONT SEAT WITH CHECK STAINLESS STEEL HINGE POSTS AND FASTENERS AND SELF-SUSTAINING HINGES, LESS COVER, BOLT CAPS, ""SLOAN ROYAL" #111-1.28 (OR #111-1.28-TP WITH TRAP PRIMER CONNECTION WHERE SHOWN ON DRAWINGS) MANUAL LEVER FLUSH VALVE WITH LEVER POINTING TOWARDS WIDE SIDE OF STALL, (1.28 GALLONS/FLUSH), "JAY R. SMITH" SERIES #410 COMPACT VERTICAL SUPPORT CARRIER, SEE ARCHITECTURAL DRAWINGS FOR ACCESSIBLE MOUNTING HEIGHTS, 1" C.W., 4" S., 2" V.
U-1
"KOHLER" #K-4991-ET BARDON, ACCESSIBLE WALL MOUNTED URINAL WITH STAINLESS STEEL STRAINER, "SLOAN ROYAL" #186-0.125-DBP MANUAL LEVER FLUSH VALVE, (0.125 GALLONS/FLUSH), "JAY R. SMITH" #637 SUPPORT CARRIER WITH BOTTOM PLATE FOR FLOOR AND WALL ATTACHMENT. SEE ARCHITECTURAL DRAWINGS FOR MOUNTING HEIGHTS, ACCESSIBLE MOUNTING HEIGHT SHALL BE 17" AFF TO LIP, 3/4" C.W., 2" S., 1-1/2" V., 2" W.C.O.
L-1
"KOHLER" KINGSTON
#K-2005, ACCESSIBLE WALL HUNG VITREOUS CHINA LAVATORY, (20" X 18") WITH BACKSPLASH AND WALL BRACKET, 4" CENTER FAUCET HOLES, "MOEN" #8886 SELF CLOSING METERING FAUCET WITH 0.5 GPM LAMINAR FLOW OUTLET. ADJUST FAUCET TO STAY OPEN FOR 10-15 SECONDS. "WATTS" #LFUSG-B-M2 THERMOSTATIC MIXING VALVE WITH COLD WATER BYPASS, "MCGUIRE" 155WC OFFSET GRID DRAIN, "JAY R. SMITH" #700-Z FLOOR MOUNTED, CONCEALED ARM CARRIER. SEE ARCHITECTURAL DRAWINGS FOR ACCESSIBLE MOUNTING HEIGHTS, LOOSE KEY COMPRESSION ANGLED WALL STOPS WITH SUPPLY, 17 GA. C.P. P-TRAP/TAILPIECE WITH ESCUTCHEON, (WRAP C.W. AND TRAP/TAILPIECE PER SPECIFICATIONS), 1/2" H.W./C.W., 2" S., 1- 1/2" V.
L-2
"KOHLER" CAXTON RECTANGLE #K-20000, ACCESSIBLE UNDER COUNTER MOUNT VITREOUS CHINA LAVATORY WITH UNDER DECK MOUNTING CLAMPS,
#1281904-7 UNDER MOUNT TEMPLATE 4" CENTER FAUCET HOLES IN COUNTER, "MOEN" #8886 SELF CLOSING METERING FAUCET WITH 0.5 GPM LAMINAR FLOW OUTLET. ADJUST FAUCET TO STAY OPEN FOR 10-15 SECONDS, "WATTS" #LFUSG-B-M2 THERMOSTATIC MIXING VALVE WITH COLD WATER BYPASS, "MCGUIRE" 155WC OFFSET GRID DRAIN, (2) LOOSE KEY COMPRESSION ANGLED WALL STOPS WITH SUPPLIES, 17 GA. C.P. P-TRAP/TAILPIECE WITH ESCUTCHEON, (WRAP C.W., H.W. AND TRAP/TAILPIECE PER SPECIFICATIONS)1/2" H.W./C.W., 2" S., 1- 1/2" V.
S-1
"JUST" #SL-ADA-2119-A-GR, ACCESSIBLE COUNTER MOUNTED, 18 GAUGE TYPE 304 STAINLESS STEEL SINGLE BOWL HAND SINK, 16"X 16" X 6 ½" DEEP BOWL SIZE, WITH CENTER REAR DRAIN OUTLET, WITH "JUST" # J35-GS BASKET STRAINER, "CHICAGO" #201-AHA8AE35ABCP FAUCET WITH HIGH ARC SWING SPOUT, LEVER HANDLES, AND 1.5 GPM AERATOR, "WATTS" #LFUSG-B-M2 THERMOSTATIC MIXING VALVE WITH COLD WATER BYPASS,, (2) LOOSE KEY ANGLED WALL STOPS WITH SUPPLIES, 17 GA. C.P. TRAP/TAILPIECE WITH ESCHUTCHEON, (WRAP C.W., H.W. AND TRAP/TAILPIECE PER SPECIFICATIONS), 1/2" H.W./C.W., 2" W., 1-1/2" V., 2" W.C.O.
S-2
"JUST" # NSFB-372-24RL, THREE COMPARTMENT, FREE STANDING NSF SINK WITH DRAINBOARDS, 14 GAUGE TYPE 304 STAINLESS STEEL, 12" DEEP EACH BOWL SIZE, 12" HIGH BACKSPLASH, WITH 24" RIGHT AND LEFT DRAINBOARDS, THREE "JUST" #J-35-LAC-1-1/2 TWIST HANDLE DRAINS, TWO "CHICAGO" #445-L12E35ABCP BACKSPLASH MOUNT FAUCETS WITH 12" SPOUT AND LEVER HANDLES AND WITH 1.5 GPM AERATOR, (2) LOOSE KEY ANGLED WALL STOPS PER FAUCET, WITH SUPPLIES, (2) 1/2" H.W./C.W., 2" I.W.
S-3
"JUST" #SL-ADA-2125-A-GR, ACCESSIBLE COUNTER MOUNTED, 18 GAUGE TYPE 304 STAINLESS STEEL SINGLE BOWL PREP SINK, 16"X 25" X 6 ½" DEEP BOWL SIZE, WITH CENTER REAR DRAIN OUTLET, WITH "JUST" # J35-GS BASKET STRAINER, "CHICAGO" #201-AHA8AE35ABCP FAUCET WITH HIGH ARC SWING SPOUT, LEVER HANDLES, AND 1.5 GPM AERATOR, "WATTS" #LFUSG-B-M2 THERMOSTATIC MIXING VALVE WITH COLD WATER BYPASS,, (2) LOOSE KEY ANGLED WALL STOPS WITH SUPPLIES, 17 GA. C.P. TRAP/TAILPIECE WITH ESCHUTCHEON, (WRAP C.W., H.W. AND TRAP/TAILPIECE PER SPECIFICATIONS), 1/2" H.W./C.W., 2" W., 1-1/2" V., 2" W.C.O.
MS-1
FLOOR MOUNTED ENAMELED CAST IRON 28" X 28" MOP SINK, "KOHLER" #K-6710 WHITBY, WITH #K-8940 RIM GUARD, AND #K-9146 GRID DRAIN, "CHICAGO" # 897-CP FAUCET WITH VACUUM BREAKER AND TOP BRACE, "FLORESTONE" #MR-0360 5 FT. HOSE WITH WALL BRACKET, AND "FLORESTONE" #MR-372 MOP HANGER,
3" P-TRAP, 3/4" H.W./C.W., 3" S., 2" V., 3" W.C.O.
SH-1
ACCESSIBLE PRESSURE BALANCED SHOWER, "MOEN" #T8342EP15, SHOWER VALVE WITH LEVER HANDLE, DETACHABLE HAND-HELD SHOWERHEAD WITH 69" METAL HOSE, 30" WALL BAR, QUICK DISCONNECT AND IN-LINE VACUUM BREAKER, FIXED SHOWER HEAD, AND DIVERTER VALVE WITH LEVER HANDLE, 1.5 GPM FLOW, 1/2" H.W./C.W.
EDF-1
ACCESSIBLE IN-WALL MOUNT REFRIGERATED STAINLESS STEEL DUAL (HI-LO) DRINKING FOUNTAINS AND BOTTLE FILLING STATION, "ELKAY" #LZWS-LRPBM28K, WITH RECESSED CHILLER, MOUNTING FRAME, STAINLESS STEEL LOUVER, MECHANICAL PUSH ACTIVATED BUBBLERS, ELECTRONIC POWERED SENSOR BOTTLE FILLER STATION, AND WATER FILTER. PROVIDE ADDITIONAL 12 PACK BOTTLE FILLER WATER FILTERS (#51300C-12PK). UNIT REQUIRES 120V, 1.0 FLA, 370 WATTS ELECTRICAL POWER. (1) SERVICE STOP, (2) 17 GA. C.P. TRAP/TAILPIECE, 1/2" C.W., 2" S., 1-1/2" V. OPERATING WEIGHT = 173 LBS.
SB-1
RECESSED METAL WATER SUPPLY BOX WITH WHITE FINISH, INTEGRAL SHUTOFF VALVE, AND MINI WATER HAMMER ARRESTOR, "SPECIALTY PRODUCTS" #OB-509.
WF-1
EVERPURE "INSURICE SINGLE i2000" MODEL #EV9324-01 ICE MACHINE WATER FILTER SYSTEM WITH #EV9612-22 0.5 MICRON CARTRIDGE (PROVIDE TWO ADDITIONAL #EV9612-22 REPLACEMENT CARTRIDGES), 1.67 GPM MAXIMUM FLOW RATE, 9,000 GALLONS RATED CAPACITY, WALL MOUNTING BRACKET, OVERALL DIMENSIONS: 29.64" HIGH X 8.04" WIDE X 5.25" DEEP. WEIGHT = 9 LBS.
FD-1
CAST IRON FLOOR DRAIN, "JAY.R. SMITH" # 2005Y02-P050-HP-NB, WITH 5" DIAMETER NICKEL BRONZE HEEL-PROOF GRATE (OR 2005-B WITH SQUARE GRATE SEE PLANS), 1/2" TRAP PRIMER CONNECTION, 2" S., 2" P-TRAP AND 1-1/2" V. BELOW SLAB.
FS-1
CAST IRON FLOOR SINK, "JAY.R. SMITH" #3140Y02-12, (12-1/2" X 12-1/2" X 6" DEEP) WITH ACID RESISTANT COATED INTERIOR, FLASHING CLAMP, NICKEL BRONZE RIM AND HALF GRATE, # 2697 AUXILLARY TRAP PRIMER CONNECTION, 1/2" C.W., 2" S., 2" P-TRAP AND 1-1/2" V BELOW SLAB.
FS-2
CAST IRON FLOOR SINK, "JAY.R. SMITH" #310Y04-12, (12-1/2" X 12-1/2" X 10" DEEP) WITH ACID RESISTANT COATED INTERIOR, FLASHING CLAMP, NICKEL BRONZE RIM AND HALF GRATE, # 2697 AUXILLARY TRAP PRIMER CONNECTION, 1/2" C.W., 4" S., 2" P-TRAP AND 2" V BELOW SLAB.
HB-1
WALL MOUNTED BENT NOSE ROUGH CHROME PLATED BRASS LOOSE TEE KEY HOSE BIBB, "WOODFORD" # 24P WITH INTEGRAL VACUUM BREAKER, 3/4" C.W.
TP-1
TRAP PRIMER IN WALL ACCESS DOOR, "PRECISION PLUMBING PRODUCTS"
#PR-500 WITH #DU-4/DU-U DISTRIBUTION UNIT AS REQUIRED FOR MULTIPLE TRAPS, AND 12" X 12" STAINLESS STEEL ACCESS DOOR WITH CYLINDER LOCK, 1/2" C.W. W/ BALL VALVE TO PRIMER INLET.
TP-2
ELECTRONIC TRAP PRIMER IN WALL WITH ACCESS DOOR, "PRECISION PLUMBING PRODUCTS" #MPB-500 WITH BOX AND "PPP" #D-814SS STAINLESS STEEL ACCESS DOOR, SOLENOID VALVE ACTIVATED, 120V/1ø.
WHA
SEAMLESS COPPER CHAMBER APPROVED FOR CONCEALED INSTALLATIONS, "SIOUX CHIEF" HYDRA-RESTER MODELS 653-AS (PDI B) OR 654-AS (PDI C) SIZED AS REQUIRED.
GD-1
SINK BOWL MOUNT WITH SINK ADAPTOR, CONTINUOUS FEED FOOD WASTE DISPOSER, "IN-SINK-ERATOR" PRO SERIES COMPACT, WITH STAINLESS STEEL GRINDING ELEMENTS, SOUNDSEAL TECHNOLOGY, 3/4 HP. MOTOR, 120V/1 PH.,
4 YEAR WARRANTY.

THE COUNTY OF FRESNO 1856

LICENSED ARCHITECT JUSTIN DOUGLAS MURATORE NO. C38020 RENEWAL: 8/29 STATE OF CALIFORNIA

MURATORE ASSOCIATES
1222 N SHAW AVE 559-365-6534
FRESNO, CA 93711 info@muratoreassociates.com

CONSULTANT STAMP

REGISTERED PROFESSIONAL ENGINEER DARRELL D. LAWRENCE M22588 REN. 9-30-2023 MECHANICAL STATE OF CALIFORNIA

LAWRENCE ENGINEERING GROUP
7084 N. Maple Ave., Suite 101 Fresno, CA 93720
(559) 431-0101 21003 FAX (559) 431-1362

APPROVED
AUG 23 2024
FRESNO FIRE DEPARTMENT

REVISION TABLE:

REV.	DESCRIPTION	DATE

DATE: 11/15/2022
SCALE: As indicated
JOB NUMBER:

ADDRESS:
BRIX & MERCER BLDGS
1221 FULTON ST
FRESNO, CA 93721

AHJ #: 21-1137 21-105379

PROJECT:
FRESNO COUNTY DEPT. OF PUBLIC HEALTH BASEMENT RENOVATION

SHEET TITLE:
PLUMBING SCHEDULES AND DETAILS

SHEET NUMBER
P3.01

FILE PATH:

INTERNAL NUMBER: 829

GRILLE SCHEDULE

CD-1
Titus Model MCD modular core diffuser with adjustable throw pattern for T-bar ceiling mounting. Complete with OBD, round-to-square neck adapter & off-white finish. Adapter shall match inlet duct diameter unless otherwise shown. With the following round ducts, provide adapter as shown.

8" Round to 12" x 12" neck
10" Round to 12" x 12" neck
12" Round to 12" x 12" neck

When the S.A. duct is 9" diameter, provide 9" to 10" increaser at neck of grille and use the 10" Round to 12" x 12" neck.

CD-2
Titus Model MCD modular core diffuser with adjustable throw pattern for surface mounting. All else per CD-1, above. See plans for throw pattern and neck size. Contractor to provide round-to-square adapter when required. Face size shall be only large enough to accommodate specified neck size.

CD-3
Titus Model TDC louver faced diffuser for surface mounting. Complete with OBD, round neck & off-white finish. See plans for throw pattern and neck size. Face size shall be only large enough to accommodate specified neck size.

CR-1 & CE-1
Titus Model 50F aluminum eggcrate grille with 1/2" x 1/2" x 1/2" eggcrate core and off-white finish for mounting in T-bar ceiling. Size shall be 24"x24", 48"x24", or 24"x12" as shown on the plans.

CR-2 & CE-2
Titus Model 350RL steel grille with 3/4" blades at 35-degree deflection, off-white finish for mounting in T-bar ceiling. Nominal size shall be 24"x24", 48"x24", or 24"x12" as shown on the plans.

CR-3, CE-3, & WR-1
Titus Model 350RL steel grille with 3/4" blades at 35-degree deflection, off-white finish for surface mounting.

FG-1
Titus Model 3FFL aluminum aeroblade filter-return grille with 3/4" blades at
45-degree deflection, and off-white finish for mounting in nominal 24"x24" T-bar ceiling. Provide (1) 20"x 20"x2" Camfil AP-13 (MERV13) filter with each grille.

WS-1
Titus Model 272RS steel wall supply grille with 3/4" double deflection blades and off-white finish.

Notes:

1. Paint all exposed shiny surfaces, behind grille face, flat black.

OUTDOOR UNIT SCHEDULE

DESIGNATION	ODU-1, ODU-2	ODU-3
COOLING CAPACITY (MBH)	228 (SEE NOTE1)	69 (SEE NOTE 1)
HEATING CAPACITY (MBH)	256 (SEE NOTE 2)	77 (SEE NOTE 2)
VOLTS/PHASE	460 / 3	460 / 3
RLA	26 AMPS	9.4 AMPS
MCA / MOP	34 / 40	19 / 25
EER / IEER (AT ARI)	N.A.	13.9 / 21.3
HEATING COP	N.A.	3.7
REFRIG. LINE SIZE	SEE SHEET M-11.1	SEE SHEET M-11.1
GAS (IN. OD)	1-3/8	3/4
LIQUID (IN. OD)	5/8	3/8
H/L LIQUID (IN. OD)	1-1/8	5/8
REFRIGERANT	R410A	R410A
MANUFACTURER	DAIKIN	DAIKIN
TYPE	ROTARY INVERTER	ROTARY INVERTER
MODEL NUMBER	REYQ240AAYDA	REYQ72XAYDA
AREA SERVED	BRIX BASEMENT	BRIX BASEMENT
LOCATION	MERCER BUILDING ROOF	MERCER BUILDING ROOF
OPER. WT (LBS)	1,000	750
ACCESSORIES		

NOTES:
1. COOLING CAPACITY IS AT 80/67 INDOORS AND 95/75 OUTDOORS.
2. HEATING CAPACITY IS AT 70/60 INDOORS AND 47/43 OUTDOORS.

INDOOR UNIT SCHEDULE (VRV HEAT PUMP WITH HEAT RECOVERY)

UNIT TYPE	NOMINAL TONS	MODEL NUMBER (See Note 1)	BLOWER SUPPLY AIR MAX CFM	BLOWER SUPPLY AIR MIN CFM	BLOWER EXT. S P. IN. WC	MCA AMPS	MOCP AMPS	FLA AMPS	VOLTS/PHASE	COOLING CAPACITY TOTAL MBH	COOLING CAPACITY SENSIBLE MBH	HEATING CAPACITY MBH	OPER. WT. (LBS)	ACCESSORIES & NOTES
DHS	4.5	FXMQ54PBVJU	1600	1125	0.40	3.4	15	2.7	208/1	54.00	40.30	60.00	110	2, 3
DHS	4.0	FXMQ48PBVJU	1375	975	0.00	3.4	15	2.7	208/1	48.0	35.8	54.0	110	2, 3
DHS	3.0	FXMQ36PBVJU	1125	800	0.00	2.9	15	2.3	208/1	36.0	28.8	40.0	110	2, 3
DHS	2.0	FXMQ24PBVJU	675	575	0.00	1.8	15	1.4	208/1	24.0	15.6	27.0	90	2, 3
DHS	1.5	FXMQ18PBVJU	625	525	0.00	1.6	15	1.3	208/1	18.0	14.4	20.0	90	2, 3
DHS	1.0	FXMQ12PBVJU	450	400	0.60	1.4	15	1.1	208/1	12.0	9.7	13.5	75	2, 3
HSW	2.0	FXAQ24PVJU	625	470	0	0.6	15	0.50	208/1	24.0	18.0	26.5	40	3, 4
HSW	1.5	FXAQ18PVJU	500	400	0	0.5	15	0.40	208/1	18.0	13.5	20.0	40	3, 4
HSW	0.9	FXAQ09PVJU	280	175	0	0.4	15	0.30	208/1	9.5	7.1	10.5	30	3, 4
CC	1.5	FXZQ18MVJU9	495	350	0	0.9	15	0.70	208/1	18.0	13.5	21.0	50	2, 3

NOTES:
1. Model Numbers are Daiken. DHS = Ducted High Static, HSW = High Sidewall, CC = Ceiling Cassette (4-way)
2. Provide with condensate lift pump and hard wired controller.
3. Cooling capacities rated at 95/75 (db/wb) ambient and 80/67 indoor. Heating capacities rated at 47/43 ambient and 70 indoor. Heating and cooling capacities include indoor fan heat..
4. Provide with external condensate pump and 72" of lift.

VRF FAN COIL SCHEDULE

Zone / Fan Coils	Room Number(s)	IDU Type	Nominal Tons of A/C	Supply CFM	O.A. CFM	Filters 2" - Merv 13	Notes
IDU / B-1	Caged Storage - Southeast	DHS	3.0	1100	250	(2) 25" x 20"	1
IDU / B-2	Caged Storage - Center	DHS	3.0	1100		(4) 24" x 12"	1
IDU / B-3	Caged Storage - Northwest	DHS	3.0	1100	250	(4) 24" x 12"	1
IDU / B-4	Ground Floor Lobby - Southeast	DHS	4.5	1350	300	(4) 24" x 12"	1
IDU / B-5	Ground Floor Lobby - Northwest	DHS	4.5	1350	300	(4) 24" x 12"	1
IDU / B-6	Prep Room / Hall	DHS	2.0	650	200	At filter/return grille	
IDU / B-7	Media Room B0302	DHS	2.0	650	250	At filter/return grille	
IDU / B-8	Media Room B0301	DHS	2.0	650	425	At filter/return grille	
IDU / B-9	Conference B0204	DHS	2.0	650	250	At filter/return grille	
IDU / B-10	Conference B0211	DHS	1.5	550	200	At filter/return grille	
IDU / B-11	Conference B0203	DHS	1.5	550	200	At filter/return grille	
IDU / B-12	Office / Lounge / Hall	DHS	4.0	1350	550	At filter/return grille	
IDU / B-13	Men's and Women's Toilet Rooms	DHS	2.0	650		At filter/return grille	
IDU / B-14	Break Room #4	DHS	2.0	650	225	At filter/return grille	6
IDU / B-15	Break Room #3	DHS	2.0	650	225	At filter/return grille	6
IDU / B-16	Break Room #2	DHS	2.0	650	225	At filter/return grille	6
IDU / B-17	Prep Kitchen	CC	1.5	350		See Notes	4, 5
IDU / B-18	Break Room w/ Aud. Seating	HSW	1.5	400	225	See Notes	4, 5, 6, 7
IDU / B-19	Mercer Network Room M0108	HSW	2.0	625		See Notes	4, 5, 7
IDU / B-20	Vestibule & Electrical Room B0106	DHS	2.0	650	100	(1) 25" x 16"	1
IDU / B-21	Hall B0210	HSW	0.75	275		See Notes	4, 5, 7
IDU / B-22	Vestibule B0101	DHS	2.0	650	100	(1) 25" x 16"	1
	Total		**50.8**		**4275**	At EF/B-7 Low Speed	
					5875	At EF/B-7 High Speed	

NOTES:
1. Filters at unit require a shop fabricated filter box on the inlet of the unit. Filters shall be side and/or bottom access.
2. Match Cooling Tons in this schedule with Indoor Unit Schedule for additional fan coil information.
3. Unit type: DHS = Ducted High Static, HSW = High Sidewall, CC = 4-way Ceiling Cassette.
4. HWS and CC units use the manufacturer's standard washable filter.
5. When the manufacturer's standard filter is used, MERV rating is less than 13 and the filter is 1" thick.
6. Outdoor Air CFM shown is with EF/B-7 on Low Speed. O.A. to Zone = 625 CFM when EF/B-7 is on High Speed.
7. Refer to Detail F/M-8 for remote condensate pump and field wiring.

SINGLE DUCT VARIABLE VOLUME TERMINAL SCHEDULE

Tag	AHU Tag	Room	Model	Size Unit	Size Outlet	CFM Max	CFM Min	Static Pressure Inlet	Static Pressure Down	Static Pressure Min	NC Levels Rad	NC Levels Dis	Hot Water Heat Coil CFM	HWHC MBH	HWHC EAT	HWHC EWT	HWHC LAT	HWHC APd	HWHC GPM	HWHC LWT	HWHC WPd	HWHC Rows	HWHC FPI	Weight Lb.
MERCER ZONE CONTROL																								
VAV / B-1	AH / B-2	Staff T.R.s and Storage	DESV	10	14x12.5	700	600	1	0.25	0.17	22	27	600	21.0	55	170	87.2	0.16	1.1	130.4	0.14	2	10	50
VAV / B-2	AH / B-2	Toilet Rooms - M0105 and M0106	DESV	09	14x12.5	400	300	1	0.25	0.04	14	18	300	11.0	55	170	88.8	0.03	1.6	155.5	0.26	1	10	50
VAV / B-3	AH / B-2	Hall - M0102	DESV	09	14x12.5	400	150	1	0.25	0.04	14	18	200	7.5	55	170	89.5	0.03	0.7	147.2	0.08	1	10	50
		Total for AH / B-2				**1500**																		
VAV / B-4	AH / B-1	Meeting Room - East Zone	DESV	14	20x17.5	1400	450	1	0.25	0.1	20	20	700	25.2	55	170	88.2	0.08	4.3	158.1	0.93	1	10	75
VAV / B-5	AH / B-1	Meeting Room - Middle Zone	DESV	14	20x17.5	1400	450	1	0.25	0.1	20	20	700	25.2	55	170	88.2	0.08	4.3	158.1	0.93	1	10	75
VAV / B-6	AH / B-1	Meeting Room - West Zone	DESV	14	20x17.5	1400	450	1	0.25	0.1	20	20	700	25.2	55	170	88.2	0.08	4.3	158.1	0.93	1	10	75
		Total for AH / B-1				**4200**																		
VAV / B-7	AH / B-4	Storage Room - M0203	DESV	10	14x12.5	550	200	1	0.25	0.06	22	23	300	11.2	55	170	89.4	0.05	1.8	157.1	0.33	1	10	50
VAV / B-8	AH / B-4	Prepared Food Holding	DESV	10	14x12.5	550	175	1	0.25	0.06	22	23	300	11.2	55	170	89.4	0.05	1.8	157.1	0.33	1	10	50
VAV / B-9	AH / B-4	Breakout Room	DESV	10	14x12.5	300	100	1	0.25	0.03	19	18	150	5.3	55	170	95.2	0.02	0.7	149.6	0.08	1	10	50
VAV / B-10	AH / B-4	Hall, Storage, and Lobby	DESV	14	20x17.5	1300	500	1	0.25	0.1	20	20	700	25.2	55	170	88.2	0.08	4.3	158.1	0.93	1	10	75
		Total for AH / B-4				**2700**																		
BRIX GROUND FLOOR ZONE CONTROL																								
VAV / B-11	AHU-2	4 SE Offices on Ground Floor	DESV	10	14x12.5	480	175	1	0.25	0.06	20	23	250	9.3	55	170	89.3	0.05	1	150.6	0.13	1	10	50
VAV / B-12	AHU-2	3 SE Offices on Ground Floor	DESV	09	14x12.5	420	140	1	0.25	0.05	14	18	210	7.4	55	170	88.3	0.08	0.7	146.3	0.08	1	10	50
VAV / B-13	AHU-2	7 NW Offices on Ground Floor	DESV	12	16x15	880	300	1	0.25	0.08	19	23	450	17.0	55	170	89.8	0.07	3.5	160.1	1.5	1	10	50
VAV / B-14	AHU-2	5 NW Offices on Ground Floor	DESV	10	14x12.5	500	175	1	0.25	0.06	20	23	250	9.3	55	170	89.3	0.05	1	150.6	0.13	1	10	50
		Partial Airflow from AHU-2				**2280**																		
BRIX MINIMUM OUTDOOR AIR CONTROL																								
VAV / B-15	AH-B5	Open Space (South) and IDU/B-4	DESV	09	14x12.5	550	550	1	0.25	0.02	17	23	N.A.											50
VAV / B-16	AH-B5	Open Space (North) and IDU/B-5	DESV	12	16x15	1000	1000	1	0.25	0.01	22	24	N.A.											60
VAV / B-17	AH-B5	Break Room - East	DESV	09	14x12.5	625	225	1	0.25	0.02	18	24	N.A.											50
VAV / B-18	AH-B5	Break Room - East Middle	DESV	09	14x12.5	625	225	1	0.25	0.02	18	24	N.A.											50
VAV / B-19	AH-B5	Break Room - West Middle	DESV	09	14x12.5	625	225	1	0.25	0.02	18	24	N.A.											50
VAV / B-20	AH-B5	Break Room - West	DESV	09	14x12.5	625	225	1	0.25	0.02	18	24	N.A.											50
VAV / B-21	AH-B5	Office/Lounge to IDU/B-12	DESV	09	14x12.5	550	550	1	0.25	0.02	17	23	N.A.											

NOTES:
1. Selections are based on Titus as Manufacturer.
2. All performance based on tests conducted in accordance with ASHRAE 130-2008 and AHRI 880-2008.
3. All NC levels determined using AHRI 885-2008 Appendix E.
4. All airflow, pressure losses and heating performance values have been corrected for altitude.
5. Units of measure: dimensions (in), airflow (cfm), water flow (gpm), air pressure (in wg), water head losses (ft) and temperatures (degF).
6. Water pressure drop (WPd) units is in ft. water.

REFRIGERANT SYSTEM BRANCH SELECTOR BOX SCHEDULE

DESIGNATION	BSB / B-1	BSB / B-2	BSB / B-3	BSB / B-4	BSB / B-5	BSB / B-6	BSB / B-7
BRANCH PORTS (TOTAL / USED)	6 / 4	6 / 4	1 / 1	4 / 4	4 / 2	4 / 3	4 / 3
POWER INPUT (W)	64	64	10	50	50	50	50
VOLTS/PHASE	208/1	208/1	208/1	208/1	208/1	208/1	208/1
MCA	0.50	0.50	0.10	0.40	0.40	0.40	0.40
MOCP	15	15	15	15	15	15	15
ODU ASSIGNMENT	ODU-1	ODU-1	ODU-1	ODU-2	ODU-2	ODU-2	ODU-3
MANUFACTURER	DAIKIN	DAIKIN	DAIKIN	DAIKIN	DAIKIN	DAIKIN	DAIKIN
TYPE	MAIN	MAIN	MAIN	MAIN	MAIN	MAIN	MAIN
MODEL NUMBER	BSF6Q54TVJ	BSF6Q54TVJ	BSQ36TVJ	BSF4Q54TVJ	BSF4Q54TVJ	BSF4Q54TVJ	BSF4Q54TVJ
OPER. WT (LBS)	50	50	30	50	50	50	50
ACCESSORIES	1, 2	1, 2	1	1, 2, 3	1, 2	1, 2	1, 2

1. PROVIDE WITH BC-SERIES BALL VALVES FOR EACH BRANCH OUTLET CONNECTION.
2. PROVIDE WITH BC-SERIES BALL VALVES FOR UNUSED OUTLET CONNECTION.
3. ONE OUTLET SERVES TWO IDUS.

SHEET INDEX

M-1.0	SCHEDULES
M-1.1	SCHEDULES
M-2.0	BASEMENT HVAC DEMO PLAN
M-2.1	BASEMENT MECH ROOM - DEMO AND NEW
M-3	PARTIAL ROOF PLAN
M-4.0	DETAILS AND KEYNOTES FOR M-4.3 & M-4.4
M-4.1	BASEMENT HVAC PLAN - MERCER NORTHEAST
M-4.2	BASEMENT HVAC PLAN - MERCER SOUTHHEAST
M-4.3	BASEMENT HVAC PLAN - BRIX SOUTHWEST
M-4.4	BASEMENT HVAC PLAN - BRIX NORTHWEST
M-5	HOOD EXHAUST SECTIONS
M-6	SECTIONS
M-7	DETAILS
M-8	DETAILS
M-9	KITCHEN HOOD EXHAUST DETAILS
M-10	CONTROL DIAGRAMS
M-11.1	VRF PIPING DIAGRAMS
M-11.2	VRF WIRING DIAGRAMS
M-12.1	TITLE 24
M-12.2	TITLE 24
M-12.3	TITLE 24
M-12.4	TITLE 24
M-15	FIRE ALARM - HVAC FANS AND FSDS SHUTDOWN DIAGRAM

APPROVED
03/17/2023
COUNTY OF FRESNO
DEVELOPMENT SERVICES

THE COUNTY OF FRESNO 1856

LICENSED ARCHITECT JUSTIN DOUGLAS MURATORE NO. C38020 RENEWAL: 8/23 STATE OF CALIFORNIA

MURATORE ASSOCIATES
1222 N SHAW AVE
FRESNO, CA 93711
559-349-9934
info@muratoreassociates.com

CONSULTANT STAMP

REGISTERED PROFESSIONAL ENGINEER MARVEL D. LAWRENCE M23588 REN. 9-30-2023 MECHANICAL STATE OF CALIFORNIA

LAWRENCE ENGINEERING GROUP
7084 N. Maple Ave., Suite 101
Fresno, CA 93720
(559) 431-0101
21003
FAX (559) 431-1362

APPROVED
AUG 23 2024
FRESNO FIRE DEPARTMENT

REVISION TABLE:

REV.	DESCRIPTION	DATE

DATE: 11/15/2022
SCALE: As indicated
JOB NUMBER:

ADDRESS:

BRIX & MERCER BLDGS
1221 FULTON ST
FRESNO, CA 93721

AHJ #: 21-1137 21-105379

PROJECT:

FRESNO COUNTY DEPT. OF PUBLIC HEALTH BASEMENT RENOVATION

SHEET TITLE:

SCHEDULES

SHEET NUMBER

M-1.0

INTERNAL NUMBER: 829

FILE PATH:

AIR CONDITIONING LEGEND		
SYMBOL	ITEM	ABBR.
	ROUND METAL DUCT	–
	ROUND FLEXIBLE DUCT	–
	RECTANGULAR METAL DUCT	–
	DUCT W/ACOUSTIC LINING	–
	SUPPLY AIR DUCT DROP	–
	RETURN AIR DUCT DROP	–
	EXHAUST DUCT AIR DROP	–
	SUPPLY AIR DUCT RISE	–
	RETURN AIR DUCT RISE	–
	EXHAUST AIR DUCT RISE	–
	TURNING VANES	TV
	EXTRACTOR	–
	VOLUME CONTROL DAMPER w/LOCKING QUADRANT	VCD
	VOLUME CONTROL DAMPER w/REMOTE OPERATOR	VCD
OR	FIRE/SMOKE DAMPER WITH ACCESS PANEL	F/SD
	SMOKE DAMPER	SD
CFM	CUBIC FEET OF AIR PER MINUTE	CFM
T	THERMOSTAT @ +4'-0"	T'STAT
S	ROOM SENSOR @ 4'-0"	-
	DIRECTION OF FLOW	–
	SUPPLY AIR	SA
	RETURN AIR	RA
	EXHAUST AIR	EA
	OUTSIDE AIR	OA
	PIPE/DUCT TURN DOWN	–
	PIPE/DUCT TURN UP	–
	BYPASS TIMER	BPT
	POINT OF CONNECTION	POC
	EXISTING (DESIGNATED)	(E)
T	THERMOSTAT WIRING	
E	ELECTRICAL WIRING	
HWS	HOT WATER SUPPLY	HWS
HWR	HOT WATER RETURN	HWR
CWS	CHILLED WATER SUPPLY	CWS
CWR	CHILLED WATER RETURN	CWR
	BACKDRAFT DAMPER	BDD
D	DRAIN	D
RD	REFRIGERANT DISCHARGE	RD
RL	REFRIGERANT LIQUID	RL
RS	REFRIGERANT SUCTION	RS
	BALANCING COCK	—
	BALL VALVE	–
	BUTTERFLY VALVE	–
	CHECK VALVE	–
	GATE VALVE	–
	PLUG VALVE	–
	PRESSURE RELIEF VALVE	PRV
	UNION	–
	INSTRUMENT WELL	–
	FLOW SWITCH	FS
	STRAINER	–
	FLEXIBLE CONNECTION	FLEX
	REDUCER OR INCREASER	–

AIR HANDLER SCHEDULE

DESIGNATION	AH / B-1	AH / B-2	AH / B-3	AH / B-4	AH / B-5
SUPPLY FAN					
SUPPLY AIR FLOW (CFM)	4,200	3,300	1,600	3150 (2700 Now)	7,000
EXTERNAL SP (IN. WC.)	3.00	1,25	3.00	3.00	3.00
TOTAL SP (IN. WC)	3.71	2.3	3.84	3.61	
OCCUPIED MIN. O.A. (CFM)	SEE NOTE 4, UP TO 1800	SEE NOTE , UP TO 1000	1,000	1,000	7000 (ALL OUTDOOR AIR)
UNOCCUPIED MIN. O.A. (CFM)	600	300	1000		
MOTOR HP	7.5	5	3	5	10
TOTAL OPERATING BHP	4.5	2.7	1.7	2.9	8.8
VOLTS/PHASE	460 / 3	460 / 3	460 / 3	460 / 3	460 / 3
RPM	3248	1611	1904	2785	3480
FAN TYPE/DIA.	AIRFOIL / 13.2	FORWARD CURVED / 10.62	FORWARD CURVED / 10.62	AIRFOIL / 13.2	AIRFOIL / 14.5
ISOLATOR DFLEC (IN.)	2	2	2	2	2
CONNECTION	TOP	TOP	TOP	TOP	FRONT
COOLING COIL	11.0	8.5	5.9	8.6	26.8
TOTAL (MBH)	131.9	101.6	70.7	103.3	321.5
SENSIBLE (MBH)	115.7	89.8	64.6	92.9	321.5
MINIMUM COIL SIZE (FT.²)	11.2	7.50	5.69	7.50	17.00
AIR PD (IN. WC)	0.48	0.73	0.28	0.39	0.34
EADB/EAWB (°F)	80.0 / 64	78 / 63	92 / 68	83 / 65	105 / 70
LAT (DB/WB)	54.8 / 53.3	53.1 / 52.3	55.1 / 53.6	56.0 / 54.0	63.0 / 55.6
ROWS / FINS PER INCH	6 / 6	5 / 10	4 / 10	5 / 9	3 / 10
GPM / PD (FT.)	24.9 / 6.2	20 / 5.4	13.8 / 2.6	20.7 / 5.8	64.3 / 9.3
EWT (°F)	45	45	45	45	45
BRANCH SIZE (IN.)	1.5	1.5	1.5	1.5	(2) 1.5
VALVE TYPE	2-WAY	2-WAY	2-WAY	2-WAY	2-WAY
HEATING COIL					
CAPACITY (MBH)	141.9	113	80	98.7	401.9
MINIMUM COIL SIZE (FT.²)	10.54	7.0	5.25	7.0	16.0
AIR PD (IN. WC)	0.10	0.14	0.07	0.09	0.25
EADB (°F)	60	60	45	60	25
LAT (DB)	91	91.3	91	88.7	77.5
ROWS / FINS PER INCH	1 / 8	1 / 9	1 / 10	1 / 10	2 / 10
GPM/PD (FT.)	13.8 / 3.5	10.8 / 3.3	7.9 / 2.0	10.3 / 2.7	38.3 / 1.1
EWT (°F)	170	170	170	170	170
BRANCH SIZE (IN.)	1.5	1.5	1.5	1.5	
VALVE TYPE	2-WAY	2-WAY	2-WAY	2-WAY	2-WAY
FILTER/MIXING BOX					
AREA (SQ. FT.) OR FILTER / QUAN. SIZE	(6) 20" x 20" x 2"	(2) 24" x 24" x 2"	(6) 20" x 20" x 2"	(6) 20" x 20" x 2"	(9) 20" x 20" x 2"
TYPE	MERV 13	MERV 13	MERV 13	MERV 13	MERV 13
FINAL PD (IN WC)	0.6	0.6	0.6	0.6	0.6
MANUFACTURER	DAIKIN VISION	DAIKIN VISION	DAIKIN VISION	DAIKIN VISION	DAIKIN VISION
TYPE	INDOOR	INDOOR	INDOOR	INDOOR	INDOOR
MODEL NUMBER	CAH012GDAM	CAH008GDAC	CAH006GDAC	CAH008GDAC	CAH019GDAM
AREA SERVED	MEETING ROOMS	ACTIVITY AREA	NORTHWEST TOILET, SHOWER, AND VESTIBULES	LOBBY, COFFEE AND STORAGE ROOMS	BRIX BASEMENT
AIR HANDLER LOCATION	MERCER BASEMENT	MERCER BASEMENT	MERCER BASEMENT	MERCER BASEMENT	BRIX MECHANICAL ROOM
OPER. WT (LBS)	1,700	1,600	1,300	1,600	2,400
ACCESSORIES	1, 2	1, 2	1, 2	1, 2, 6	1, 2, 3, 5

1. DOUBLE WALL CONSTRUCTION WITH R-13 INJECTED FOAM INSULATION, INVERTER DUTY MOTORS ON SUPPLY FAN(S), AND 6" HIGH BASE RAIL.
2. REFER TO SECTIONS FOR FILTER SIZE AND QUANTITY.
3. (2) STACKED HEATING COILS AND (2) STACKED COOLING COILS.
4. DETERMINED BY CO2 SENSOR.
5. SUPPLY AIR CFM SHOWN IS FOR AIR HANDLER SELECTION PURPOSES. FOR ACTUAL AIRFLOW, SEE VRF FAN COIL SCHEDULE, SHEET M-1.0.
6. SELECT AH AT 3150 CFM SHOWN, BUT ADJUST TO 2700 CFM NOW.

LIST OF FIRE/SMOKE DAMPERS FOR THE BRIX AND MERCER BASEMENTS

Damper I.D.	Duty	Damper Positon During Normal Operation	Damper Position When with Smoke Detected
FSD B- 1	S.A. to Mercer Meeting Rooms	OPEN	Close
FSD B- 2	R.A. from Mercer Meeting Rooms	OPEN	Close
FSD B- 3	O.A. to AH / B-1	OPEN	Close
FSD B- 4	R.A. to AH / B-4	OPEN	Close
FSD B- 5	E.A. duct from Equipment and Food Storage Room	OPEN	Close
FSD B- 6	R.A. from Storage and Breakout Room	OPEN	Close
FSD B- 7	R.A. from Hall	OPEN	Close
FSD B- 21	South S.A. riser off IDU / B-4 to Mercer Lobby floor grille	OPEN	Close
FSD B- 22	North S.A. riser off IDU / B-4 to Mercer Lobby floor grille	OPEN	Close
FSD B- 23	South S.A. riser off IDU / B-5 to Mercer Lobby floor grille	OPEN	Close
FSD B- 24	North S.A. riser off IDU / B-5 to Mercer Lobby floor grille	OPEN	Close
FSD B- 25	S.A. from AHU-2 to VAV / B-16	OPEN	Close
FSD B- 26	S.A. from VAV / B-14 through east wall of Breakroom	OPEN	Close
FSD B- 27	S.A. from VAV / B-14 to S.A. plenum and risers to Ground Floor	OPEN	Close
FSD B- 28	S.A. from VAV / B-12 to S.A. plenum and risers to Ground Floor	OPEN	Close
FSD B- 29	S.A. from VAV / B-11 to S.A. plenum and risers to Ground Floor	OPEN	Close
FSD B- 30	O.A. duct to north side of Brix Basement (See Note 5)	OPEN	Close
FSD B- 31	S.A. from AHU-2 to VAV / B-13 and VAV / B-14 (See Note 5)	OPEN	Close
FSD B- 32	S.A. from VAV / B-13 to S.A. plenum and risers to Ground Floor	OPEN	Close
SD B- 40	Smoke damper to isolate AH/B-5 from common plenum with Ground Floor	OPEN	Close

NOTES (Typical for all FSDs shown):
1. Refer to Detail B/M-1.1 for FSD installation of FSD B21, B-22, B-23, and B-24. Refer to Detail A/M-1.1 for all others.
2. There must a duct, smoke detector associated with each Fire/Smoke Damper and located within 5' of the FSD. Refer to Electrical Drawings.
3. Access panels for each FSD shall be located on the open ceiling or T-bar side whenever possible.
4. Field measurement of existing openings is required before ordering dampers.
5. FSDs B-30 & B-31 must be vertical with actuators on the bottom. Other dampers may need to be vertical if space is not available on side of duct. The contractor must make this determination.

EXHAUST FAN SCHEDULE

DESIGNATION	EF / 4	EF / 7	EF / 12
CFM	3,600	2,500	2,800
EXT. S P (IN. WC)	1.00	3.10	1.00
MOTOR HP/ BHP	2.0 / 0.98	3.0 / 2.13	1.5 / 0.76
VOLTS/ PHASE	460/3	460/3	460/3
RPM	1202	2160	1202
DRIVE	DIRECT	BELT	DIRECT
MOUNTING	SEE NOTE 2	SEE NOTE 2	SEE NOTE 2
MANUFACTURER	GREENHECK	GREENHECK	GREENHECK
TYPE	UPBLAST UTILITY SET	UPBLAST UTILITY SET	UPBLAST UTILITY SET
MODEL NUMBER	USF-20	USF-15	USF-20
CONTROL	INTERLOCK WITH AH/B-1	SEE DETAIL A/M-10	INTERLOCK WITH AH/B-3
LOCATION	MERCER ROOF	EAST STAIRWAY ROOF	MERCER ROOF
DUTY	MEETING ROOMS ECON. RELIEF	KITCHEN HOOD & GEN. EXHAUST	ACTIVITY ROOM ECON. RELIEF
OPER. WT. (LBS)	375	250	375
ACCESSORIES	1 - 7	1 - 8	1 - 7

NOTES:
1. PREMIUM EFFICIENCY, INVERTER-DUTY MOTOR, ADJUSTABLE DRIVE PULLEY, AND WEATHERHOOD.
2. 1" SPRING ISOLATORS WITH SEISMIC RESTRAINTS.
3. INLET AND OUTLET COMPANION FLANGES.
4. BOLTED ACCESS DOOR AND 1" DRAIN PLUG.
5. UP DISCHARGE AND BAKED ENAMEL FINISH.
6. UP DISCHARGE AND BAKED ENAMEL FINISH.
7. WELDED SCROLL HOUSING.
8. UL/cUL-762 POWER VENTILATOR FOR RESTAURANT EXHAUST APPLIANCES.

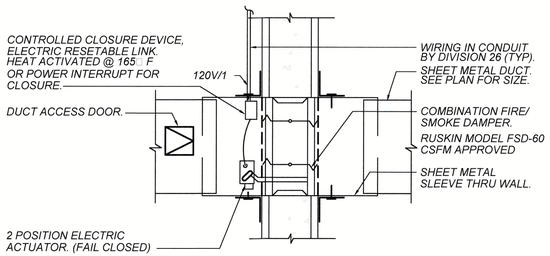

NOTES:
1. 16 GA. L FRAME WELDED, (MIN. 50% PERIMETER) TO ALL 4 SIDES OF SLEEVE. L FRAME SHALL BE DESIGNED TO LAP WALL NOT LESS THAN 1". ROUGH OPENING IN MASONRY WALLS AND NET OPENING IN FRAME WALLS SHALL EXCEED NET O.D. OF DAMPER ASSEMBLY. DO NOT FASTEN SIDES OR TOP OF L TO WALL OR PARTITION.
2. FIRE DAMPER SHALL BE SFM LISTED AND INSTALLED IN ACCORDANCE WITH MANUFACTURER'S RECOMMENDATIONS.

FIRE/SMOKE DAMPER THROUGH WALL

SCALE: N.T.S.

A M-1.1

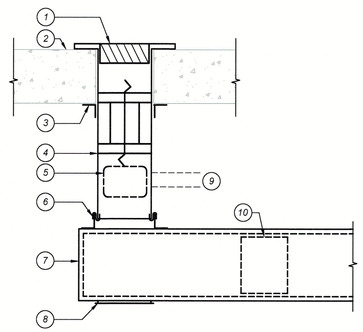

FIRE/SMOKE DAMPER THROUGH FLOOR TO LOBBY FLOOR GRILLE

SCALE: 1-1/2"=1'-0"

B M-1.1

KEYNOTES

1. Remove existing floor grille and reinstall within frame of damper sleeve. Nominal size is 6" x 48, but field verification is required.
2. Existing concrete floor of Ground Floor Lobby.
3. Perimeter angle frame. Refer to Ruskin installation instructions.
4. Ruskin Model FSD60-2-1 fire/smoke damper with TS-150 firestat and 20" length sleeve. Damper shall be installed in accordance with manufacturer's recommendations. CSFM Listing 3235-0245:126.
5. 2-position electric actuator (fail close).
6. Breakaway duct connection.
7. Supply air duct. See Sheet M-4.4 for size.
8. 6" x 24" access panel in bottom of duct.
9. 120-volts to actuator provided by Electrical.
10. Duct, smoke detector. Refer to Electrical Drawings for specifications, installation, and wiring.

APPROVED
03/17/2023
COUNTY OF FRESNO
DEVELOPMENT SERVICES

THE COUNTY OF FRESNO 1856

LICENSED ARCHITECT JUSTIN DOUGLAS MURATORE NO. C38020 RENEWAL: 6/25 STATE OF CALIFORNIA

MURATORE ASSOCIATES
1222 N SHAW AVE. FRESNO, CA 93711
559-326-6534
info@muratoreassociates.com

CONSULTANT STAMP

REGISTERED PROFESSIONAL ENGINEER MICHAEL D. CAVALLARO M22598 REN. 9-30-2023 MECHANICAL STATE OF CALIFORNIA

LAWRENCE ENGINEERING GROUP
7084 N. Maple Ave., Suite 101 (559) 431-0101 21003 Fresno, CA 93720 FAX (559) 431-1362

APPROVED
AUG 23 2024
FRESNO FIRE DEPARTMENT

REVISION TABLE:

REV.	DESCRIPTION	DATE

DATE: 11/15/2022
SCALE: As indicated
JOB NUMBER:

ADDRESS:
BRIX & MERCER BLDGS
1221 FULTON ST
FRESNO, CA 93721

AHJ #: 21-1137 21-105379

PROJECT:
FRESNO COUNTY DEPT. OF PUBLIC HEALTH BASEMENT RENOVATION

SHEET TITLE:
SCHEDULES

SHEET NUMBER
M-1.1

FILE PATH:

INTERNAL NUMBER: 829

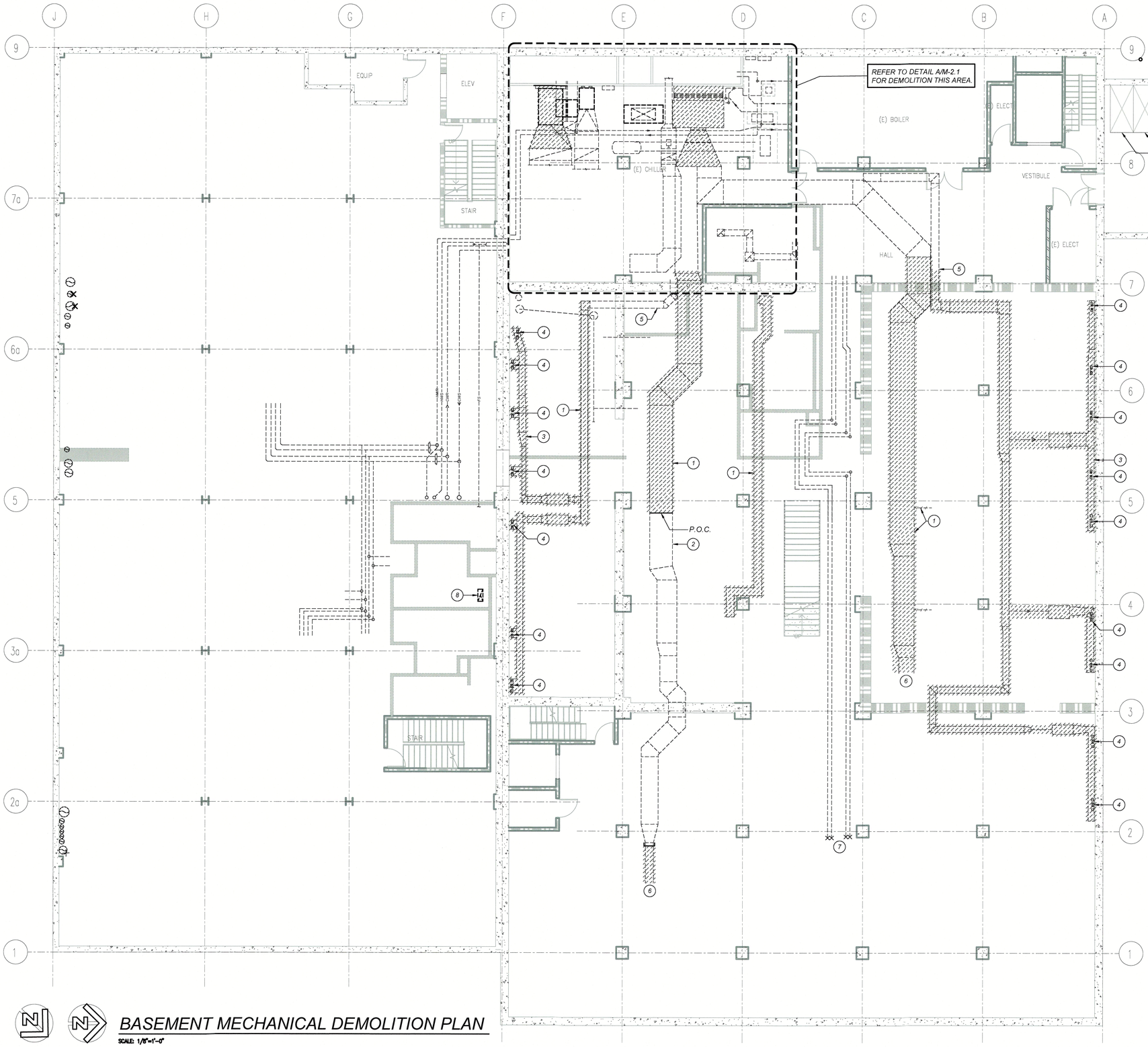

DEMOLITION PLANNING

The Contractor shall give the County 14 days notice when any of the following services will be interrupted. If off-hours construction is required, arrangements shall be made with the County.

A. Space cooling chilled water

B. Space heating hot water

C. Airflow to various rooms served by AHU-2

D. Domestic cold-water chilling (for drinking fountains)

The contractor is responsible for researching the locations of existing shut off valves when draining the hot and chilled water systems to make new connections or to remove existing equipment and/or piping. The extend of system drainage and down time must be minimized.

There are four zones (with multiple rooms) serving the Ground Floor from ductwork in the Brix Basement. Supply air comes from AHU-2. Either the north two or south two zones may be taken out of service at a time. New FSDs may be temporarily energized and wired "open" during this time and the hot-water reheat coils do not need to be immediately piped for temporary occupation of the Ground Floor offices.

DEMOLITION KEYNOTES:

1. Remove existing ductwork (shown crosshatched) and connected unused branch ductwork (shown or not). Remove unused duct supports, typical.
2. Existing ductwork to remain. Remove unused branch ducts and seal all openings air tight.
3. Remove horizontal supply air ductwork to Ground Floor risers, typical.
4. Supply air riser to Ground Floor riser to remain. Refer to Section E/M-9.
5. Existing ductwork from AHU-2 to remain.
6. Remove existing ductwork downstream.
7. Remove existing piping downstream.
8. Existing O.A. drop for Mercer basement to be reused.

APPROVED
03/17/2023
COUNTY OF FRESNO
DEVELOPMENT SERVICES

TRUE NORTH

PROJECT NORTH

BASEMENT MECHANICAL DEMOLITION PLAN

SCALE: 1/8"=1'-0"

COUNTY OF FRESNO 1856

LICENSED ARCHITECT
JUSTIN DOUGLAS MURATORE
NO. C38020
RENEWAL: 6/23
STATE OF CALIFORNIA

MURATORE ASSOCIATES
1222 N SHAW AVE.
FRESNO, CA 93711
559-326-6934
info@muratoreassociates.com

CONSULTANT STAMP

REGISTERED PROFESSIONAL ENGINEER
RANDALL D. LAWRENCE
M23568
REN. 9-30-2023
MECHANICAL
STATE OF CALIFORNIA

LAWRENCE ENGINEERING GROUP
7084 N. Maple Ave., Suite 101
(559) 431-0101
21003
Fresno, CA 93720
FAX (559) 431-1362

APPROVED
AUG 23 2024
FRESNO FIRE DEPARTMENT

REVISION TABLE:

REV.	DESCRIPTION	DATE

DATE: 11/15/2022
SCALE: As indicated
JOB NUMBER:

ADDRESS:

BRIX & MERCER BLDGS
1221 FULTON ST
FRESNO, CA 93721

AHJ #: 21-1137 21-105379

PROJECT:

FRESNO COUNTY DEPT. OF PUBLIC HEALTH BASEMENT RENOVATION

SHEET TITLE:

BASEMENT HVAC PLAN

SHEET NUMBER

M-2.0

FILE PATH:

INTERNAL NUMBER: 829

DEMOLITION KEYNOTES:

1. Existing HWS and HWR routed to Mercer equipment.
2. Existing chilled water expansion tank to be temporarily removed to permit removal of RF-1 and ductwork.
3. Remove existing duct supports and R.A. drop from floor to finished floor +100". Support existing duct (including elbow drop) from structure above as floor supports are removed.
4. Remove existing ductwork.
5. Remove RF-1 serving the Brix Basement. Fan may need to be cut up to remove.
6. Provide permanent sheet metal cover of R.A. opening and seal airtight. Reinforce with vertical supports if required. Patch does not require insulation.
7. Existing R.A. plenum to remain active during construction.
8. Existing R.A. damper to remain active during construction.
9. Existing 5 HP VFD for RF-1 to be abandoned in place.
10. Existing 2 HP VFD for RF-2 to remain active.
11. Existing EMS panel for AHU-1 and AHU-2. Replace existing AHU-1 controls with new EMS controls.
12. Existing RF-2 (serving Ground Floor) to remain active during construction.
13. Existing mechanical room exhaust fans to remain.
14. Existing AHU-2 (serving Ground Floor) to remain active during construction. Approximately 5400 supply cfm.
15. Existing HW shut-off valves.
16. Access panel to mixed air plenum.
17. South end of O.A. plenum on level above.
18. Remove existing O.A. damper. Actuator will be reused.
19. Remove AHU-1, filter rack, hot and chilled water piping, and discharge ductwork up to P.O.C. shown on the drawings. The opening to mixed air plenum must be temporarily sealed.
20. Existing chilled and hot water piping to and from upper floors. There are no shut off valves, at this location, to isolate these upper floors.
21. Remove existing HWS and HWR in front of AHU-1.
22. Existing VFD for AHU-1 shall remain and be reused for new AH/B-5.
23. Existing refrigerant-leak purge fan to remain active during construction.
24. Existing domestic water chiller. Disconnect electrical and piping connections and temporarily relocate to remove AHU-1 and install AH-5B. Provide temporary bypass of CW to maintain supply to drinking fountains.
25. Existing control air compressor to remain.
26. Cut piping and provide a removable cap.
27. Remove existing HW piping to and from existing HW coil.
28. Existing fire pump controls.
29. Existing fire jockey pump.
30. Existing fire pump.
31. Existing domestic water booster pump assembly.
32. Existing exhaust air riser to remain. See Sheet M-4.3 for new connections.

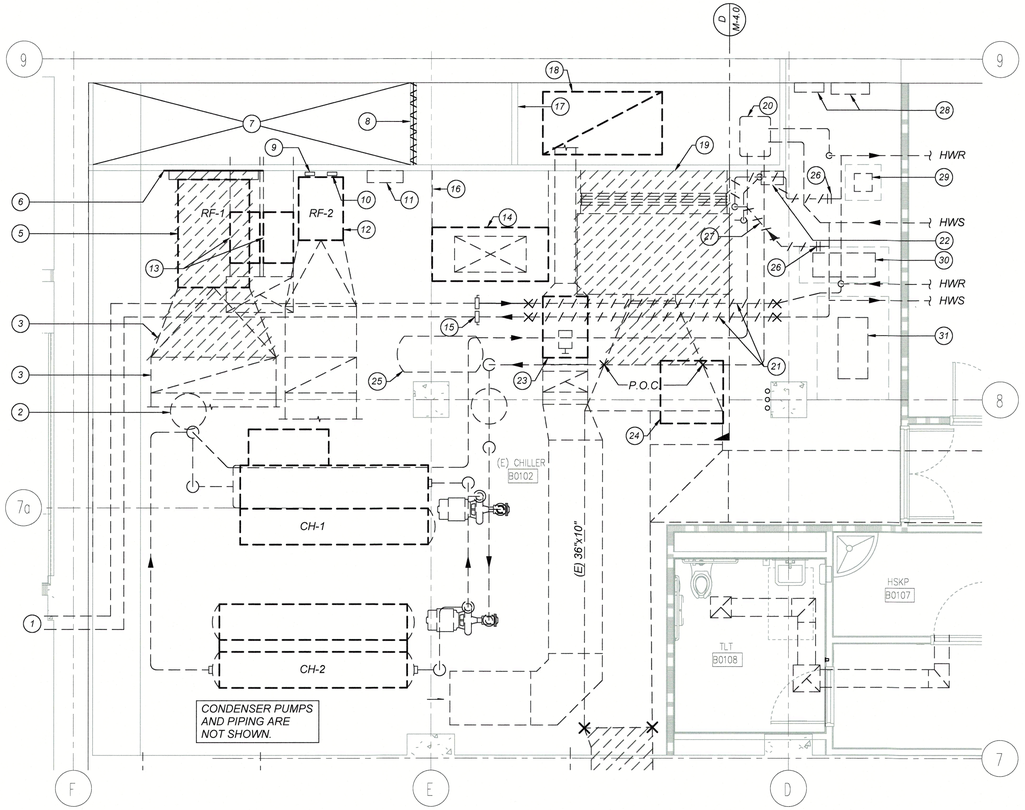

TRUE NORTH

PROJECT NORTH

MECHANICAL ROOM DEMOLITION PLAN

SCALE: 1/4"=1'-0"

A M-2.1

KEYNOTES:

1. Floor to ceiling double wall partition with 2" insulation and threshold for access door. This partition separates the existing O.A. plenum into two plena. Seal around all sides.
2. 30" x 76" high door, with gasketing, double wall construction with 2" insulation, and access handle on both sides. **Verify sizes of all dampers and doors prior to ordering.**
3. 30" x 42" outdoor air, opposed blade damper in ceiling of plenum for AHU-2. Damper shall be furnished by Control Contractor and installed by Mechanical Contractor. Control Contractor to relocate the existing actuator to this damper and test for proper operation during the economizer cycle.
4. Shaded area requires sheet metal work to frame in new O.A. damper in ceiling of plenum.
5. Unobstructed O.A. opening to AH/B-5.
6. Existing partition is in the O.A. plenum in the level above.
7. Mixed air plenum for AHU-2.
8. Return air plenum for AHU-2.
9. Existing elbow abandoned in place.
10. Provide S/M cover over belt and pulley of purge fan.
11. Area around side and front of air handler for hot and chilled water manifolds for AH/B-5. Piping on the side shall not interfere with access to the fan motor.
12. Restore 2-1/2" (verify) HWS and HWR offset loop between P.O.C.s 1 and 2. Piping on this loop shall be grooved to facilitate removal. Provide floor or ceiling support.
13. P.O.C.1 with grooved piping and shut-off valves where shown.
14. P.O.C. 2 with grooved piping.
15. 2" HWS to and HWR from hot water coils. See Detail F/M-7.
16. 2-1/2" CWS to and CWR from chilled water coils. See Detail F/M-7.

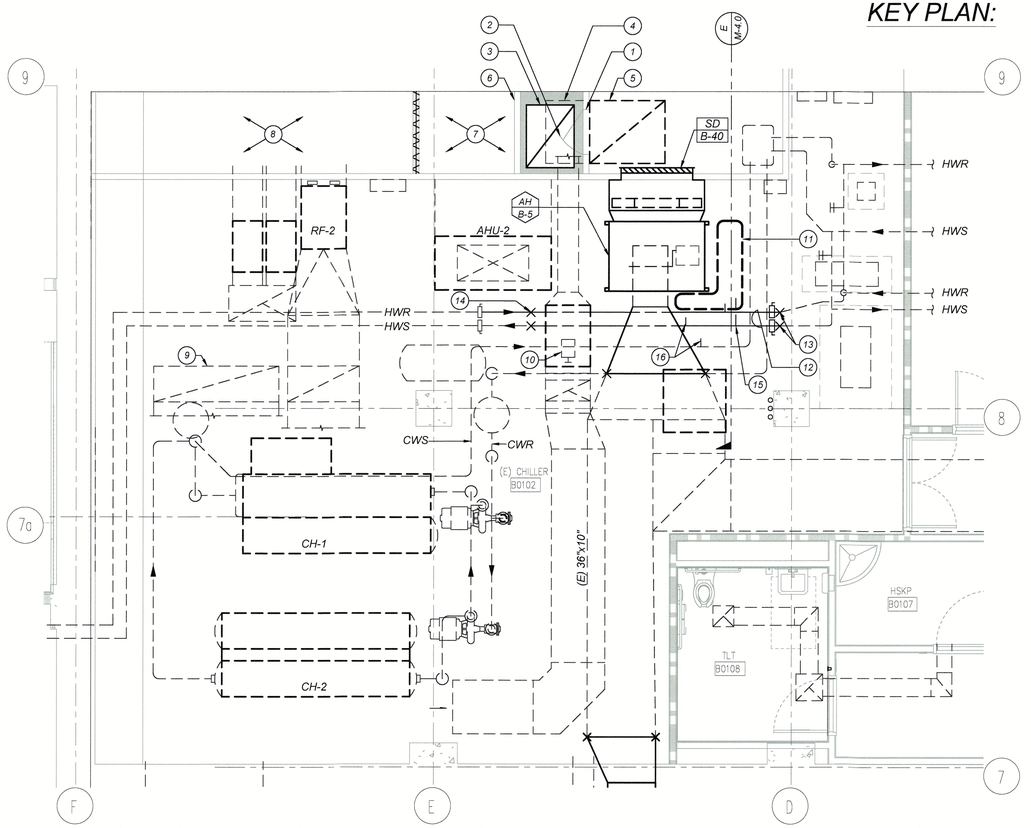

MECHANICAL ROOM (NEW WORK) PLAN

SCALE: 1/4"=1'-0"

B M-2.1

APPROVED
03/17/2023
COUNTY OF FRESNO
DEVELOPMENT SERVICES

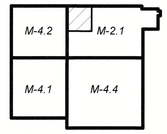

KEY PLAN:

THE COUNTY OF FRESNO 1856

LICENSED ARCHITECT
JUSTIN DOUGLAS MURATORE
NO. C38020
RENEWAL: 8/25
STATE OF CALIFORNIA

MURATORE ASSOCIATES
1222 N SHAW AVE.
FRESNO, CA 93711
559-369-6534
info@muratoreassociates.com

CONSULTANT STAMP

REGISTERED PROFESSIONAL ENGINEER
ROBERT D. CAVENDER
M22586
REN. 9-30-2023
MECHANICAL
STATE OF CALIFORNIA

LAWRENCE ENGINEERING GROUP
7084 N. Maple Ave., Suite 101
Fresno, CA 93720
(559) 431-0101
21003
FAX (559) 431-1362

APPROVED
AUG 29 2024
FRESNO FIRE DEPARTMENT

REVISION TABLE:

REV.	DESCRIPTION	DATE

DATE: 11/15/2022
SCALE: As indicated
JOB NUMBER:

ADDRESS:

BRIX & MERCER BLDGS
1221 FULTON ST
FRESNO, CA 93721

AHJ #: 21-1137 21-105379

PROJECT:

FRESNO COUNTY DEPT. OF PUBLIC HEALTH BASEMENT RENOVATION

SHEET TITLE:

MECHANICAL ROOM DEMO & NEW PLAN

SHEET NUMBER

M-2.1

FILE PATH:

INTERNAL NUMBER: 829

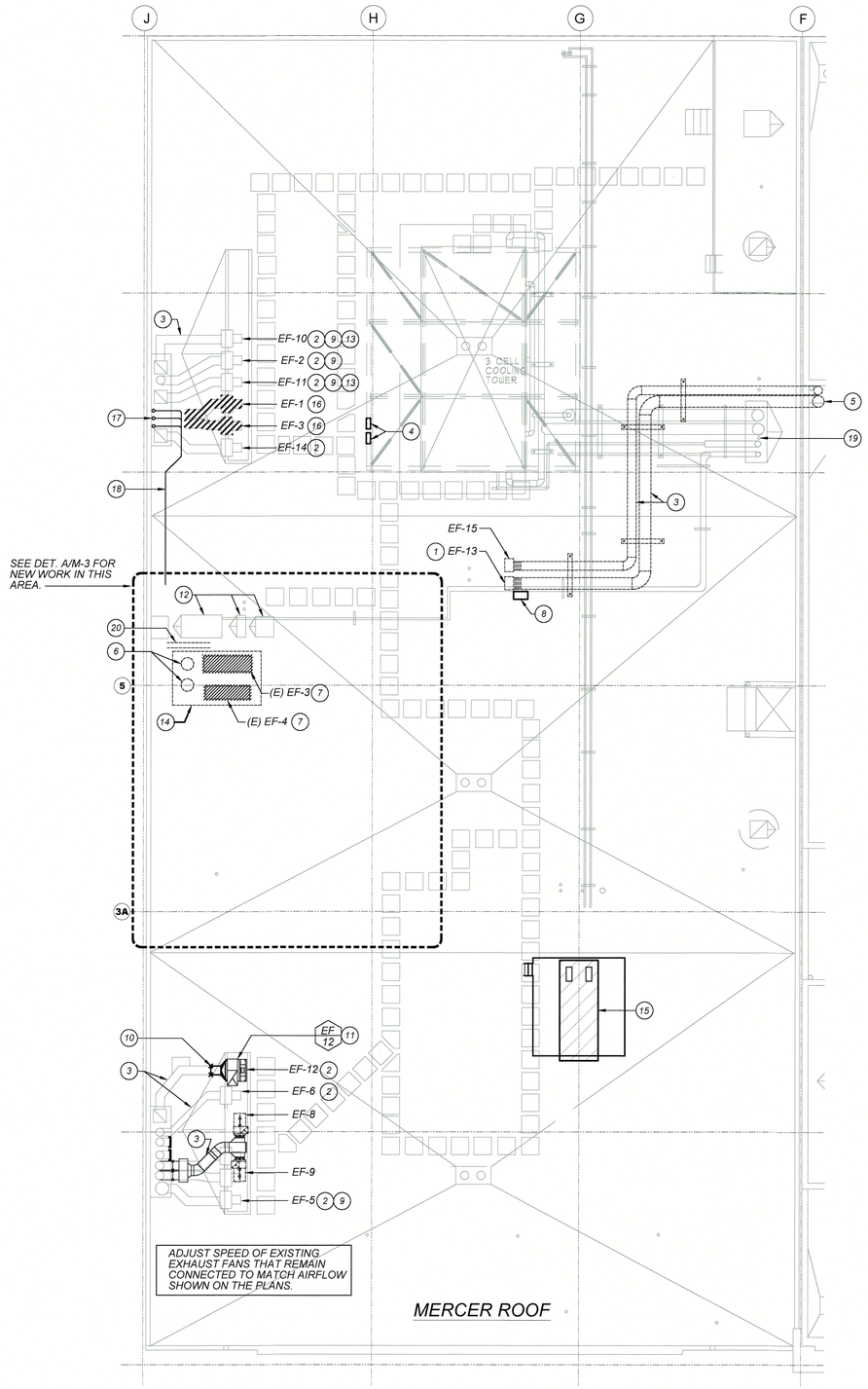

MERCER ROOF

PARTIAL MECHANICAL ROOF PLAN

SCALE: 1/8"=1'-0"

KEYNOTES:

(A) Extend existing ductwork to plenum. Stainless steel not required.

(B) Sheet metal exhaust plenum with 18" in direction of airflow. Provide 14" x 14" access panel at side of duct.

(C) VFD cabinet for EF-10. Cabinet shall be NEMA 3R with thermostatically controlled fan and ABB drive with BACnet card. VFD shall be 2 HP (connected motor will be less horsepower). Cabinet shall be furnished by Controls Contractor, installed by Electrical.

(D) VFD cabinet for EF-11. All else per Keynote C.

(E) VFD cabinet for EF-12 with 3 HP VFD (connected motor will be less horsepower). All else per Keynote C.

(F) VFD cabinet for EF-4 with 3 HP VFD (connected motor will be less horsepower). All else per Keynote C.

(G) Square, sheet metal reducer to accommodate inlet cone companion flange. Attach flex connection with sheet metal cover over top and sides.

(H) Remove existing spring isolators and pedestal support and install new isolators per Detail E/M-5. Seal existing openings caused by removal of bolts.

(J) Install 24" high discharge duct on outlet and expand to 18" x 24" to accommodate a Ruskin BD6 backdraft damper. Provide 1/2" x 1/2" mesh screen on top of duct just beyond BDD open blades.

(K) Electrical subpanel on roof for mechanical equipment. See Electrical Drawings.

(L) Refer to Sheet M-11.1 for refrigerant pipe sizing. One line (on the drawing) represents three refrigerant lines.

(M) Remove roofing down to top of concrete. Install pipe support per Detail F/M-6 and restore roof. See Specifications for spacing.

(N) Refer to Detail B/M-3 for ODU attachments. Also refer to Structural Detail 3/S1.02 and Architectural details.

KEYNOTES:

(1) At the top of existing discharge duct, install a backdraft damper (approximately 13" x 10") and cover with 1" square-mesh screen.

(2) Provide 1/2" x 1/2" square-mesh screen over fan discharge duct.

(3) Existing exhaust duct(s) to remain.

(4) Existing VFDs for EF-8 and EF-9 to remain.

(5) See Sheet M-4.3 for continuation.

(6) Existing, welded exhaust risers to remain. See Detail A/M-3 for modification and extension of ductwork.

(7) Remove existing fan. Patch holes in existing platform cover to maintain weather-tight condition, typical at all existing platforms. Fill existing screw holes with wood putty and use heavy mastic on holes in sheet metal cover.

(8) VFD cabinet for EF-13 with 2 HP VFD (motor may be less HP). All else per Keynote C/Detail A/M-3.

(9) Install full-size Ruskin BD-6 in discharge duct just below 1" mesh screen.

(10) Provide increaser from existing duct to new EF-12 inlet. Provide flex connection with sheet metal cover over top and sides.

(11) Remove existing fan and install new EF-12. Install 24" high discharge duct on outlet and expand to 18" x 24" to accommodate a Ruskin BD6 backdraft damper. Provide 1/2" x 1/2" mesh screen on top of duct just beyond BDD open blades.

(12) Remove equipment from existing platforms and seal holes. Existing platforms may be used to support refrigerant piping.

(13) Replace existing motor with new. Refer to Roof Exhaust Fan Schedule.

(14) Existing platform and sheet metal cover to remain. Patch unused holes and seal weather tight.

(15) Future Emergency Generator will replace existing generator.

(16) Remove exhaust fan, support rail, isolators, and exhaust duct through platform. Provide weatherproof sealant over bolt holes in platform.

(17) Three sets of (3) refrigerant lines through platform into duct shaft. See Detail K/M-8.

(18) Three sets of (3) refrigerant lines on roof.

(19) Existing gas up through roof. See Plumbing Drawings.

(20) Remove existing water supply and drain piping above roof that is no longer required. Provide S.O.V. on supply lines, insulate, and cap above roof. Restore roofing as required.

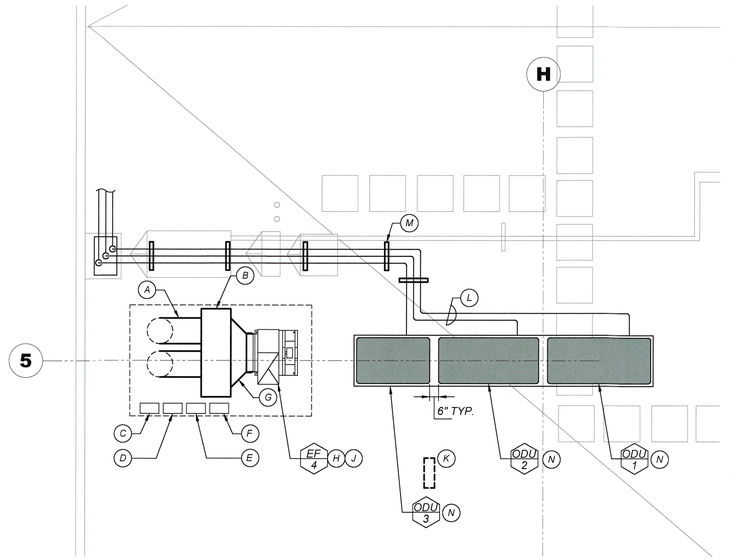

NEW OUTDOOR UNITS

SCALE: 1/4"=1'-0"

A M-3

NOTES:
1. *FOR ROOF SYSTEM DETAIL SEE DETAIL 3/S1.02 AND ARCHITECTURAL DRAWINGS.*
2. *4X_ TO BE SHAPED FOR ROOF SLOPE AND LEVEL CURB.*
3. *SEE EQUIPMENT MANUFACTURER FOR SIZE.*

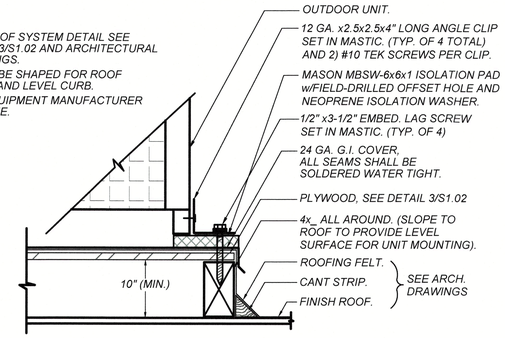

ODU ATTACHMENTS

SCALE: NONE

B M-3

ROOF EXHAUST FAN ACTION REQUIRED

(from top to bottom of this sheet)			Balance to	
Fan I.D.	Duty	Action	CFM	Notes
EF-10	General Relief Air (from Corridor)	Replace existing motor with 1 HP motor	1600	2
EF-2	General Exhaust	Replace/adjust drives for new CFM	700	4
EF-11	Economizer Relief Air for AH-B4	Replace existing motor with 1 HP motor	1900	2
EF-1	No Longer Required	Remove fan and inlet ductwork		6
EF-3 (west)	No Longer Required	Remove fan and inlet ductwork		6
EF-14	Serves Floors above the Basement	Remain Active		1
EF-15	None	Abandon in place		3
EF-13	Brix Toilet Rooms	Remain Active	600	5
EF-3 (east)	None	Remove Under This Project		
(existing) EF-4	None	Remove Under This Project		
EF-4	Econ. Relief for Mercer Meeting Rooms	New fan replaces existing EF-4	3600	
EF-12	Econ. Relief for Mercer Activity Room	New fan replaces existing EF-12	2500	
EF-6	None	Abandon in place		
EF-8	None	Abandon in place		
EF-9	None	Abandon in place		
EF-5	Mercer East Toilet Rooms	Replace/adjust drives for new CFM	850	4

Notes:
1. Balancing of this fan is not within scope.
2. New motor shall be inverter duty, 460-volt, 3-phase.
3. Exhaust duct terminates near Brix toilet rooms and is reserved for future use.
4. Reconnect existing, 120-volt exhaust fan circuit and route circuit through an EMS start contactor. Use existing wiring and contactors where possible. Field verify, see Electrical Drawings, and coordinate with Electrical Contractor.
5. Existing plans show motor to be 1 HP at 460/3. Field verify.
6. Refer to Keynote 16.

APPROVED
03/17/2023
COUNTY OF FRESNO
DEVELOPMENT SERVICES

THE COUNTY OF FRESNO 1856

LICENSED ARCHITECT JUSTIN DOUGLAS MURATORE NO. C38020 RENEWAL: 6/23 STATE OF CALIFORNIA

MURATORE ASSOCIATES
1222 N SHAW AVE. FRESNO, CA 93711
559-365-6934 info@muratoreassociates.com

CONSULTANT STAMP

REGISTERED PROFESSIONAL ENGINEER MICHAEL D. LAWRENCE M22588 REN. 9-30-2023 MECHANICAL STATE OF CALIFORNIA

LAWRENCE ENGINEERING GROUP
7084 N. Maple Ave., Suite 101 Fresno, CA 93720
(559) 431-0101 21003 FAX (559) 431-1362

APPROVED
AUG 29 2024
FRESNO FIRE DEPARTMENT

REVISION TABLE:

REV.	DESCRIPTION	DATE

DATE: 11/15/2022
SCALE: As indicated
JOB NUMBER:

ADDRESS:
BRIX & MERCER BLDGS
1221 FULTON ST
FRESNO, CA 93721

AHJ #: 21-1137 21-105379

PROJECT:
FRESNO COUNTY DEPT. OF PUBLIC HEALTH BASEMENT RENOVATION

SHEET TITLE:
MERCER ROOF PLAN

SHEET NUMBER
M-3

FILE PATH:

INTERNAL NUMBER: 829

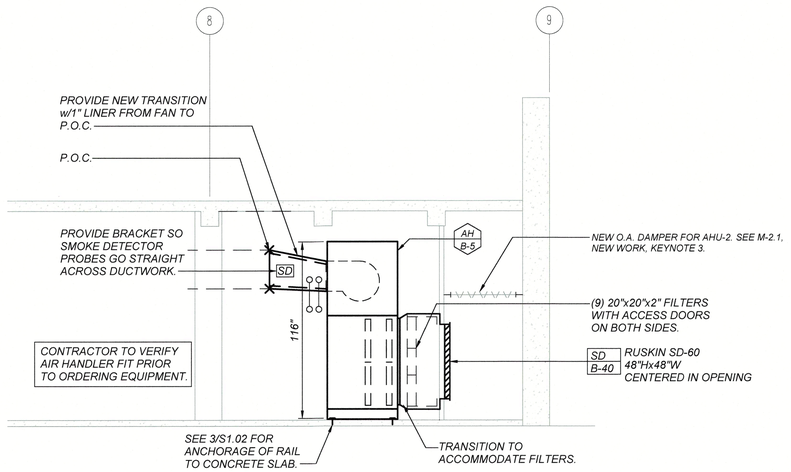

SECTION AT AH / B-5

SCALE: 1/4"=1'-0"

E M-4.0

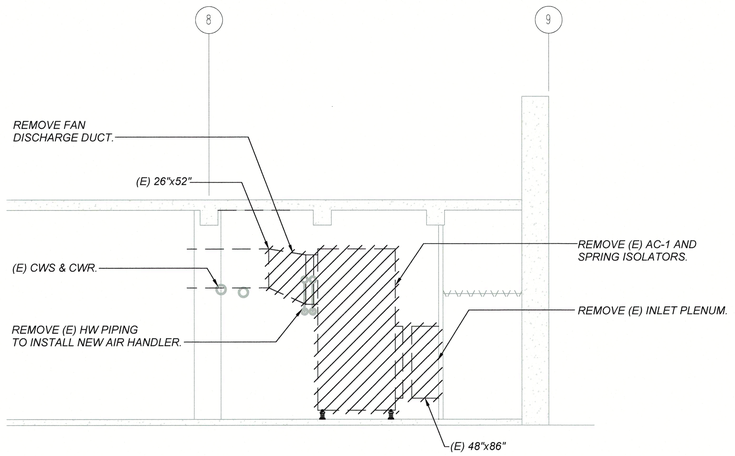

DEMOLITION SECTION AT AC-1 (AHU-1)

SCALE: 1/4"=1'-0"

D M-4.0

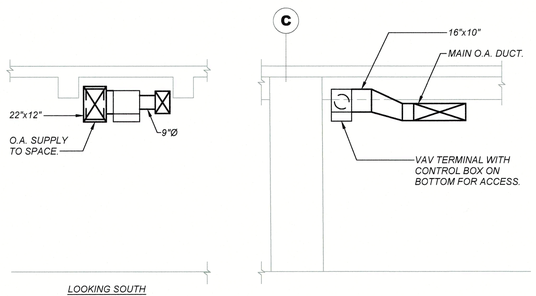

SECTION

SCALE: NONE

A M-4.0

KEYNOTES FOR M-4.3 AND M-4.4

1. Liquid, suction, and gas refrigerant lines between BSBs and ODU (listed). Refer to VRF piping diagrams (Sheet M-11.1) for line sizes.
2. Liquid and gas refrigerant lines between BSBs and IDUs. Refer to VRF piping diagrams (Sheet M-11.1) for line sizes.
3. Refrigerant piping through existing masonry wall. If the penetration is not shown on the Structural Drawings, submit an RFI for approval.
4. Refer to Detail A/M-8 for branch dampers, typical.
5. VAV box (by Controls Contractor) set at constant volume to maintain constant Outdoor Air airflow. Refer to Detail E/M-7 for mounting. Controls Contractor to provide 24 VAC. For VAV-17, 18, 19, 20 (in the Brix Break Room), boxes are mounted with the control box on the bottom, for access.
6. O.A. grille for minimum outside air to the south portion of the Caged Storage area.
7. O.A. grille for minimum outside air to the north portion of the Caged Storage area.
8. O.A. grille within 18" of inlet to IDU/B-4. This provides ventilation air to the (south) Ground Floor Lobby.
9. O.A. grille within 18" of inlet to IDU/B-5. This provides ventilation air to the (north) Ground Floor Lobby.
10. CFM shown is the supply air (in the existing riser) to a typical Ground Floor office. Refer to Section E/M-9 for typical notations.
11. Typical duct-mounted, smoke detector, located within 5' of FSD. Refer to Electrical Drawings for specifications and wiring.
12. Refer to Detail G/M-8 for equipment support, typical.
13. Refer to Detail A/M-8 for typical S.A. grille connections.
14. Refer to Detail B/M-8 for typical R.A. or E.A. grille connections.
15. Air quantity up to Ground Floor Lobby.
16. Offset ductwork down below beam.
17. Automatic Balancing Damper (ABD) to maintain constant outdoor airflow to fan coil or supply-air grille during occupancy hours. ABD shall be duct size unless otherwise indicated. Refer to "VRF Fan Schedule," Sheet M-1.0, for O.A. CFM.
18. Branch dampers not required upstream of VAV boxes or ABDs, typical.
19. Duct insulation not required.
20. Provide 5' of insulated flex duct at connection to grille, and then connect to sheet metal duct with no insulation required.
21. Duct, hot water piping, or refrigerant lines through existing opening in wall. Refer to Architectural Drawings for sealing the opening, if required.
22. Refer to Detail B/M-10 for Conference Room fan coil control (by EMS Contractor).
23. When R.A. duct connects to plenum with O.A. duct, no balancing dampers are required.
24. O.A. duct from AH/B-5. Air is pre-tempered, so insulation not required unless shown.
25. Refer to Details C, D, & E/M-7 for VAV box controls, piping, and mounting.
26. Refer to Detail A/M-1.1 for fire/smoke damper installation, typical.
27. FSD access panel, typical at all FSDs weather or not shown.
28. Refer to Detail A/M-8 for support, but all duct must be sheet metal in exposed areas.
29. Ducts, grilles, pipes (insulated or not), hangers, etc. shall be painted flat black in Break Room. VAV boxes shall also be painted, but do not paint over any labels.
30. Provide sheet metal escutcheon (with 2" flange) where duct meets wall framing.
31. EMS control panel with controller for Conference Room controls (Detail B/M-10) and control transformer for nearby VAV boxes. Panel requires 120 volts, see Electrical.
32. Duct increases in height to allow duct taps. May be required in other areas.
33. Refrigerant piping through holes in existing 1/4" steel plate. Piping insulation may be reduced to 1/4" neoprene to fit existing holes in plate and concrete wall.
34. Existing 16" diameter S.S. duct to be reused. See Sheet M-3 for roof exhaust fan notes.
35. P.O.C. of existing 16" diameter exhaust to reducer and connect to 12" round.
36. Refer to Detail D/M-8 for "Ceiling Cassette" IDU.
37. Provide new Tee with 1-1/2" top connection on exiting HWS and HWR. Provide 1-1/2" ball valves and connect into new reheat piping.
38. Hold ductwork tight to north-south beams.
39. Actual dimension may be different than shown on the plan. Field verify.
40. Maximum air temperature rise at full-range output and 2,500 CFM exhaust is 20 degrees.
41. Duct shall be welded stainless steel from hood connection to flex connection at exhaust fan. Provide access panels as required by Code. Connection to hood may be offset to the north (within hood limits) to lessen the duct offset. Hood must be ordered this way.
42. 16" x 16" sheet metal sleeve. Verify for fit.
43. End of acoustic lining. Downstream duct shall be wrapped.
44. Location of ABD and diffuser may be relocated to fit field conditions and avoid conduit.
45. Field coordinate IDU location to maintain access to fan compartment and filter. Existing fire sprinkler in this area will need to be relocated.
46. Exposed S.A. duct does not require insulation. Ducts over ceilings require insulation.
47. ABD with 6" diameter discharge duct into 30" of 6" x 6" acoustic lined duct. Locate high. This duct supplies outdoor air to the vestibule area.
48. Refer to Detail F & J/M-8 for "High-wall" IDUs.
49. I-touch controller for VRF system. Refer to Sheet M-11.2. The 120-volt circuit to the EMS panel also feeds this panel.
50. Connect new exhaust grilles (with balancing dampers) to existing exhaust system.
51. Existing exhaust riser is active and also serves floors above.
52. Refer to Detail B/M-4.0 for piping through masonry wall.
53. Existing S.A. ductwork from AHU-2 to remain. This duct serves the offices at the Ground Floor, above.
54. Refer to Detail D/M-4.0 for end-of-line piping connections.
55. Provide sheet metal cap with sealant over existing opening, typical where ducts have been removed.
56. Provide sheet metal cap over existing R.A. opening.
57. Exposed ductwork in storage areas does not require painting.
58. Hard connect fan coil R.A. duct to side of plenum box over R.A. grille.

APPROVED
03/17/2023
COUNTY OF FRESNO
DEVELOPMENT SERVICES

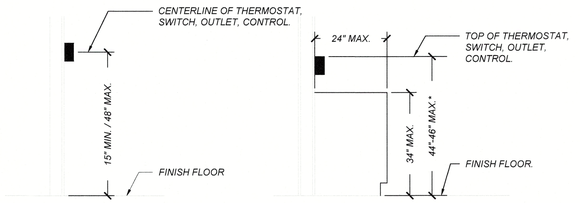

* 44" MAX. FOR WHEEL CHAIR FORWARD APPROACH AND 46" MAX. FOR SIDE APPROACH PER CBC 1127A.9.6.

THERMOSTAT OR CONTROL SWITCH MOUNTING HEIGHT

SCALE: NONE

F M-4.0

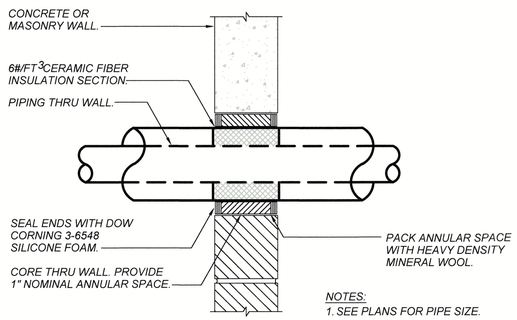

NOTES:
1. SEE PLANS FOR PIPE SIZE.

PIPE THROUGH CONCRETE WALL W/ FIRESTOP

SCALE: NONE

B M-4.0

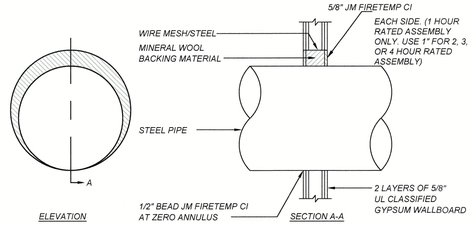

PENETRATION FIRESTOP FOR AN UNINSULATED PIPE THROUGH A GYPSUM WALLBOARD ASSEMBLY

NOTES:

1. WALL ASSEMBLY - THE 1,2,3, OR 4 HR FIRE -RATED GYPSUM WALLBOARD/STUD WALL ASSEMBLY SHALL BE CONSTRUCTED OF THE MATERIALS AND IN THE MANNER SPECIFIED IN THE INDIVIDUAL U300 OR U400 SERIES WALL AND PARTITION DESIGNS IN THE UL FIRE RESISTANCE DIRECTORY AND SHALL INCLUDE THE FOLLOWING CONSTRUCTION FEATURES.
   A. STUDS: WALL FRAMING MAY CONSIST OF EITHER WOOD STUDS OR STEEL CHANNEL STUDS. WOOD STUDS TO CONSIST OF NOM. 2x4 IN. LUMBER SPACED 16" O.C. STEEL STUDS TO BE MIN 3 5/8" WIDE AND SPACED MAXIMUM 24" O.C.
   B. WALLBOARD, GYPSUM*: THICKNESS, TYPE, NUMBER OF LAYERS AND FASTENERS, AS SPECIFIED IN THE INDIVIDUAL WALL AND PARTITION DESIGN. MAX DIAM OF OPENING IS 9".
   THE HOURLY F RATING OF THE FIRESTOP SYSTEM IS EQUAL TO THE HOURLY FIRE RATING OF THE WALL ASSEMBLY IN WHICH IT IS INSTALLED.
2. THROUGH PENETRANTS - ONE METALLIC PIPE OR TUBING TO BE INSTALLED EITHER CONCENTRICALLY OR ECCENTRICALLY WITHIN THE FIRESTOP SYSTEM. THE ANNULAR SPACE BETWEEN PIPE, CONDUIT OR TUBING AND PERIPHERY OF OPENING SHALL BE MIN 0 (POINT CONTACT) IN TO MAX 1 3/8" PIPE, CONDUIT OR TUBING TO BE RIGIDLY SUPPORTED ON BOTH SIDES OF WALL ASSEMBLY.
   THE FOLLOWING TYPES AND SIZES OF METALLIC PIPES, CONDUITS OR TUBING MAY BE USED:
   A. STEEL PIPE: NOM 24" DIAM (OR SMALLER) SCHEDULE ST 40 (OR HEAVIER) STEEL PIPE.
      1A. NOM 4" DIAM (OR SMALLER) SCHEDULE 7 (OR HEAVIER) STEEL PIPE.
      2A. NOM 8" DIAM (OR SMALLER) SCHEDULE 10 (OR HEAVIER) STEEL PIPE.
      3A. NOM 10" DIAM (OR SMALLER) SCHEDULE 20 (OR HEAVIER) STEEL PIPE.
      4A. NOM 24" DIAM (OR SMALLER) SCHEDULE 40 (OR HEAVIER) STEEL PIPE.
   B. IRON PIPE: NOM 24" DIAM (OR SMALLER) CAST OR DUCTILE IRON PIPE. WHEN IRON PIPE IS USED T RATING IS 1/4" HR. WHEN STEEL OR IRON PIPE IS USED T RATING IS 1/4 HR FOR NOM 4" DIAM (OR SMALLER) AND 0 HR FOR STEEL OR IRON PIPES GREATER THAN NOM 4" DIAM.
   C. CONDUIT: NOM 6" DIAM (OR SMALLER) STEEL ELECTRICIAL METALLIC TUBING (EMT). WHEN EMT IS USED T RATING IS 1/4 HR.
   D. CONDUIT: NOM 6" DIAM (OR SMALLER) STEEL CONDUIT. WHEN STEEL CONDUIT IS USED T RATING IS 1/4 HR.
   E. COPPEER TUBING: NOM 6" DIAM (OR SMALLER) TYPE L (OR HEAVIER) COPPER TUBE IS USED T RATING IS 1/4 HR.
   F. COPPEER PIPE: NOM 6" DIAM (OR SMALLER) REGULAR (OR HEAVIER) COPPER PIPE. WHEN COPPER PIPE IS USED T RATING IS 0 HR.
3. FILL, VOID OR CAVITY MATERIAL* - SEALANT - MIN 5/8" THICKNESS OF FILL MATERIAL FOR 1 HR FIRE RATED WALL ASSEMBLIES AND MIN 1" THICKNESS OF FILL MATERIAL FOR 2, 3 OR 4 HR FIRE RATED WALL ASSEMBLIES, APPIED WITHIN THE ANNULUS, FLUSH WITH BOTH SURFACES OF WALL. AT POINT CONTACT LOCATION BETWEEN PIPE COVERING AND WALLBOARD, A MIN 1/2" DIAM BEAD OF FILL MATERIAL SHALL BE APPLIED AT THE WALLBOARD / PIPE COVERING INTERFACE ON BOTH SURFACES OF WALL.

PIPE THROUGH STUD WALL w/FIRESTOP

SCALE: NONE

C M-4.0

THE COUNTY OF FRESNO 1856

LICENSED ARCHITECT JUSTIN DOUGLAS MURATORE NO. C38020 RENEWAL: 8/23 STATE OF CALIFORNIA

MURATORE ASSOCIATES
1222 H SHAW AVE. FRESNO, CA 93711
559-326-6534
info@muratoreassociates.com

CONSULTANT STAMP

REGISTERED PROFESSIONAL ENGINEER MICHAEL D. CHUCHIAN M23588 REN. 9-30-2023 MECHANICAL STATE OF CALIFORNIA

LAWRENCE ENGINEERING GROUP
7084 N. Maple Ave., Suite 101
(559) 431-0101
21003
Fresno, CA 93720
FAX (559) 431-1362

APPROVED
AUG 29 2024
FRESNO FIRE DEPARTMENT

REVISION TABLE:

REV.	DESCRIPTION	DATE

DATE: 11/15/2022
SCALE: As indicated
JOB NUMBER:

ADDRESS:
BRIX & MERCER BLDGS
1221 FULTON ST
FRESNO, CA 93721

AHJ #: 21-1137 21-105379

PROJECT:
FRESNO COUNTY DEPT. OF PUBLIC HEALTH BASEMENT RENOVATION

SHEET TITLE:
DETAILS

SHEET NUMBER
M-4.0

INTERNAL NUMBER: 829

FILE PATH:

KEYNOTES:

1. Refer to Detail A/M-8 for branch dampers, typical.
2. Branch dampers not required upstream of VAV boxes.
3. Refer to typical Details C, D, and E/M-7 for VAV box mounting, controls, and piping.
4. Fire/smoke damper. Refer to Detail A/M-1.1.
5. Duct, smoke detector, typical. Refer to Electrical Drawings for specifications, installation, and wiring. When installed in conjunction with an FSD, the detector must be within 5' of the FSD.
6. Space above Meeting Rooms ceilings is used as a return air plenum. Materials and wiring in this plenum must be plenum rated.
7. EMS control panel with one transformer for controller and one transformer for VAV boxes. Wiring to VAV boxes by Control Contractor.
8. Point of connection of new E.A. duct to existing.
9. Outdoor air duct with 1" thermal liner. Liner required on all Mercer O.A. ducts to prevent condensation as the inlet temperatures may be below freezing.
10. Ceiling in Activity Room is a grid only. Diffusers and lights are attached to grid, but there are no ceiling tiles. See Architectural plans. All ductwork, piping (with or without insulation), hangers, dampers, etc. visible from below and must be painted flat black. Do not paint over any nameplates or model numbers.
11. End of acoustic lining. No insulation is required downstream.
12. Existing ductwork will be used for Activity Room economizer relief.
13. Typical Room Sensor and CO2 sensor. CO2 only required for selected zones. Refer to Control Diagrams.
14. Refer to Detail A/M-8 for S.A. diffuser connections.
15. Provide concentric reducer when required to match VAV inlet, typical.
16. Exhaust grille mounted similar to B/M-8 except attaching ductwork must be sheet metal, internal lining is not required unless shown, and no filter is required.
17. Return air grille open to plenum above ceiling.
18. Return duct open to plenum. See Detail E/M-8.
19. Insulated piping through rated wall. Refer to Detail G/M-7. In Mechanical Room, provide tees, and route 1-1/2" HWS & HWR to AH/B-1 and route 2" HWS & HWR towards AH/B-2 and AH/B-3. Then split to 1/-1/2" HWS and HWR to AH/B-2, and 1" HWS and HWR to AH/B-3. Refer to Detail B/M-7.
20. Point of connection on new O.A. duct to existing drop. Provide turning vanes in elbow.
21. Point of connection of new 2-1/2" CWS to CWR to existing.
22. Duct does not require insulation.
23. This duct detector serves FSD/B-1 and AH/B-1 supply air.
24. 2" CWS drop to and CWR riser from AH/B-1.
25. 1-1/2" CWS to and 1-1/2" CWR from AH/B-2 and 1-1/2" CWS to and 1-1/2" CWR from AH/B-3. Refer to Detail B/M-7.
26. 34" x 22" (net inside) R.A. opening.
27. "AFS" airflow station, rectangular or round, required on AH/B-1, B-2, B-3 and B-4. Refer to Detail A/M-7.
28. Cap unused chilled or hot water piping and insulate ends, typical.
29. Refer to Detail A/M-11.1.
30. Motorized return air damper for AH/B-3.
31. Sealing around ductwork is not required at this shaft, but do replace vinyl covered ducts with a sheet metal cap and seal air tight.
32. When balancing damper is located over a hard ceiling, provide a cable-controlled damper, flexible cable, and ceiling-mounted cable controller. When ceiling controller is more than 36" from the damper, provide ceiling label or a record drawing showing which ceiling controller is connected to which damper. This note applies throughout the project.

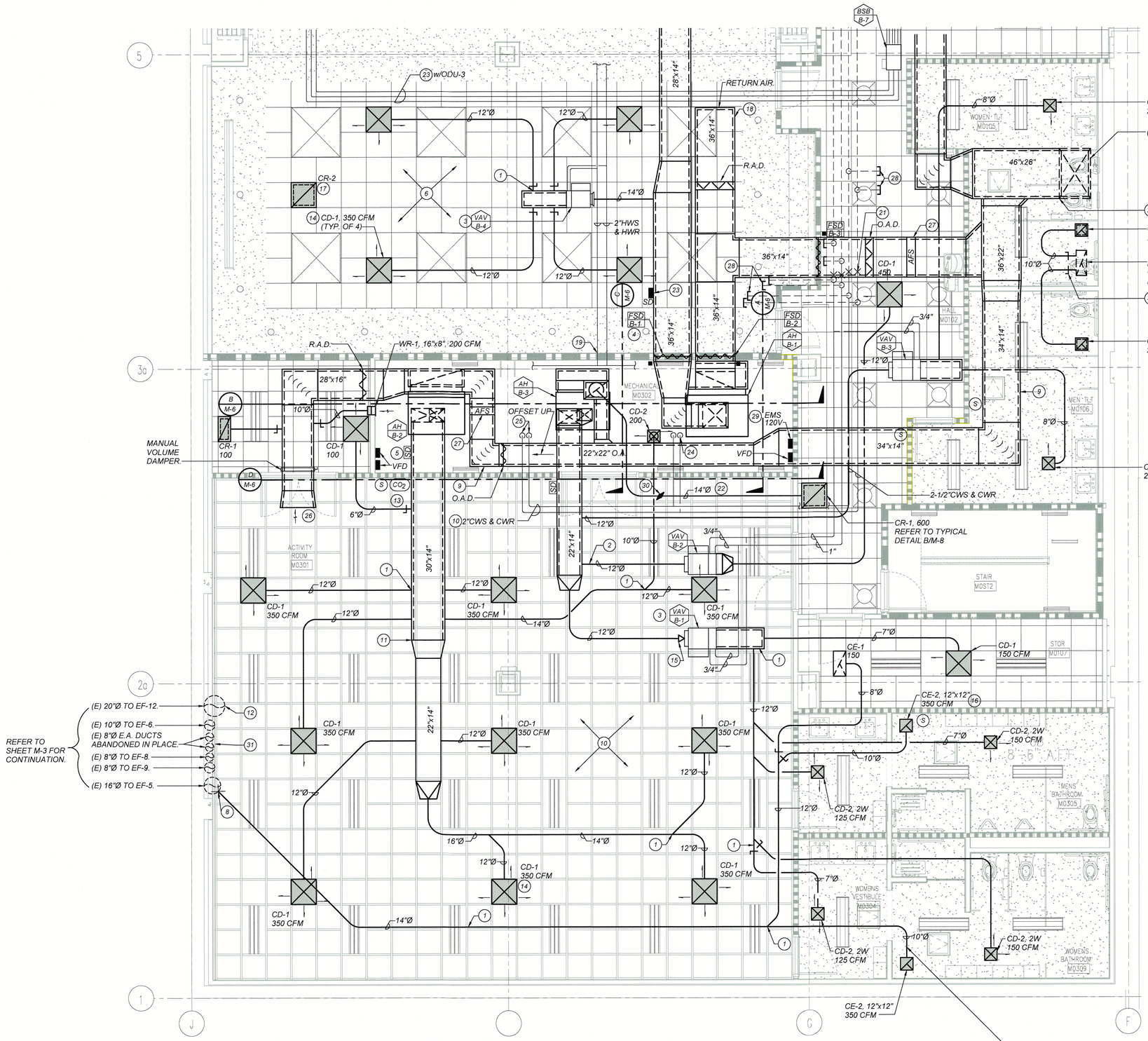

WHEN CONNECTING NEW HW OR CW PIPING TO EXISTING, VERIFY SUPPLY AND RETURN AND THAT THE EXISTING, VERIFY THAT THE EXISTING PIPE SIZE IS EQUAL TO OR LARGER.

EXHAUST DUCTWORK ON THIS PROJECT SHALL BE SHEET METAL OR SHEET METAL w/ACOUSTIC LINING (WHERE SHOWN) TYP.

TRUE NORTH

PROJECT NORTH

PARTIAL MERCER BASEMENT RCP PLAN

SCALE: 1/4"=1'-0"

KEY PLAN:

THE COUNTY OF FRESNO 1856

LICENSED ARCHITECT JUSTIN DOUGLAS MURATORE NO. C38020 RENEWAL: 8/23 STATE OF CALIFORNIA

MURATORE ASSOCIATES
1222 N SHAW AVE, FRESNO, CA 93711
559-346-4934
info@muratoreassociates.com

CONSULTANT STAMP

REGISTERED PROFESSIONAL ENGINEER RUSSELL D. CHILCOTT M23588 REN. 9-30-2023 MECHANICAL STATE OF CALIFORNIA

LAWRENCE ENGINEERING GROUP
7084 N. Maple Ave., Suite 101, Fresno, CA 93720
(559) 431-0101 21003 FAX (559) 431-1362

APPROVED
AUG 29 2024 BJ
FRESNO FIRE DEPARTMENT

APPROVED
03/17/2023
COUNTY OF FRESNO DEVELOPMENT SERVICES

REVISION TABLE:

REV.	DESCRIPTION	DATE

DATE: 11/15/2022
SCALE: As indicated
JOB NUMBER:

ADDRESS:

BRIX & MERCER BLDGS
1221 FULTON ST
FRESNO, CA 93721

AHJ #: 21-1137 21-105379

PROJECT:

FRESNO COUNTY DEPT. OF PUBLIC HEALTH BASEMENT RENOVATION

SHEET TITLE:

ENLARGED BASEMENT HVAC PLAN

SHEET NUMBER

M-4.1

FILE PATH:

INTERNAL NUMBER: 829

KEYNOTES:

1. Refer to Detail A/M-8 for branch dampers, typical.
2. Branch dampers not required upstream of VAV boxes.
3. Refer to typical Details C, D, and E/M-7 for VAV box mounting, controls, and piping.
4. Fire/smoke damper. Refer to Detail A/M-1.1.
5. Duct, smoke detector installed within 5' of fire/smoke dampers, typical. Refer to Electrical Drawings for specifications, installation, and wiring.
6. Space above Meeting Rooms ceilings is used as a return air plenum. Materials and wiring in this plenum must be plenum rated.
7. EMS control panel with one transformer for controller and one transformer for VAV boxes. Wiring to VAV boxes by Control Contractor.
8. Point of connection of new E.A. duct to existing.
9. Outdoor air duct with 1" thermal liner. Liner required on all Mercer O.A. ducts to prevent condensation as the inlet temperatures may be below freezing.
10. 18" x 16" (inside clear) discharge plenum with 1" liner.
11. Liquid, suction, and pressure equalizing lines routed up, in the existing, rated duct shaft, to ODUs on roof. See Sheet M-3 for continuation. Attach piping to shaft at 5' o.c. Any penetrations of the shaft in the upper floors, to gain access, must be restored to the original construction at the end of each day to maintain a 1-hour shaft rating.

    Piping shall be attached to the outer wall and will require 45 offsets around horizontal protrusions. Determine exact routing in field.
12. Liquid, suction, and pressure equalizing lines between Branch Selector Boxes and Outdoor Unit. Refer to details on Sheet M-11.1 for sizing. Horizontal runs of refrigerant piping should be routed within 12" of the structure whenever possible. All lines shall be insulated in all locations.
13. Liquid, suction, and pressure equalizing lines through existing holes in the masonry wall. See notations on Sheet M-4.3.
14. Sheet metal duct. Offset up.
15. Refer to Detail J/M-8 for installation.
16. Refrigerant lines through existing holes in masonry wall.
17. Typical room sensor with adjustable set point. See Control Diagrams and typical detail F/M-4.0.
18. Airflow station. Refer to Detail A/M-7.
19. Extend existing round ducts to relief air plenum.
20. HW supply and return piping to VAV and AH manifolds.
21. CHW supply and return piping to AH manifold.
22. Offset ductwork to avoid vertical framing of soffit, typical.
23. One-hour fire barrier where shown.
24. Access panel on bottom of duct. Coordinate locations of FSD, return air damper, and smoke detector in this area.
25. Seal around ducts and pipes entering shaft to prevent leaks into the R.A. plenum over the Meeting Rooms. Where abandoned exhaust risers have a vinyl covering, replace covering with a sheet metal cap and seal airtight. Bottom opening shall be sealed to prevent airflow, but it does not need to be enclosed to 1-hour construction.
26. Return air grille CFM equals the sum of the supply diffusers for that room unless otherwise noted, typical throughout project. Where R.A. grille CFM is shown, it shall be balanced at full, air handler VAV airflow.
27. Pressure sensor for control of EF-11.
28. Remove entire section of exhaust duct (in shaft) to EF-1 to get space for new refrigerant piping.
29. Remove entire section of exhaust duct (in shaft) to EF-3 to get space for new refrigerant piping.
30. Existing exhaust riser from floor above to roof to remain.
31. Outline of existing, rated, duct shaft to roof. Shaft is open at the bottom. Seal around ducts and piping at bottom of shaft. Opening shall be sealed to prevent airflow, but it does not need to be enclosed to 1-hour construction.

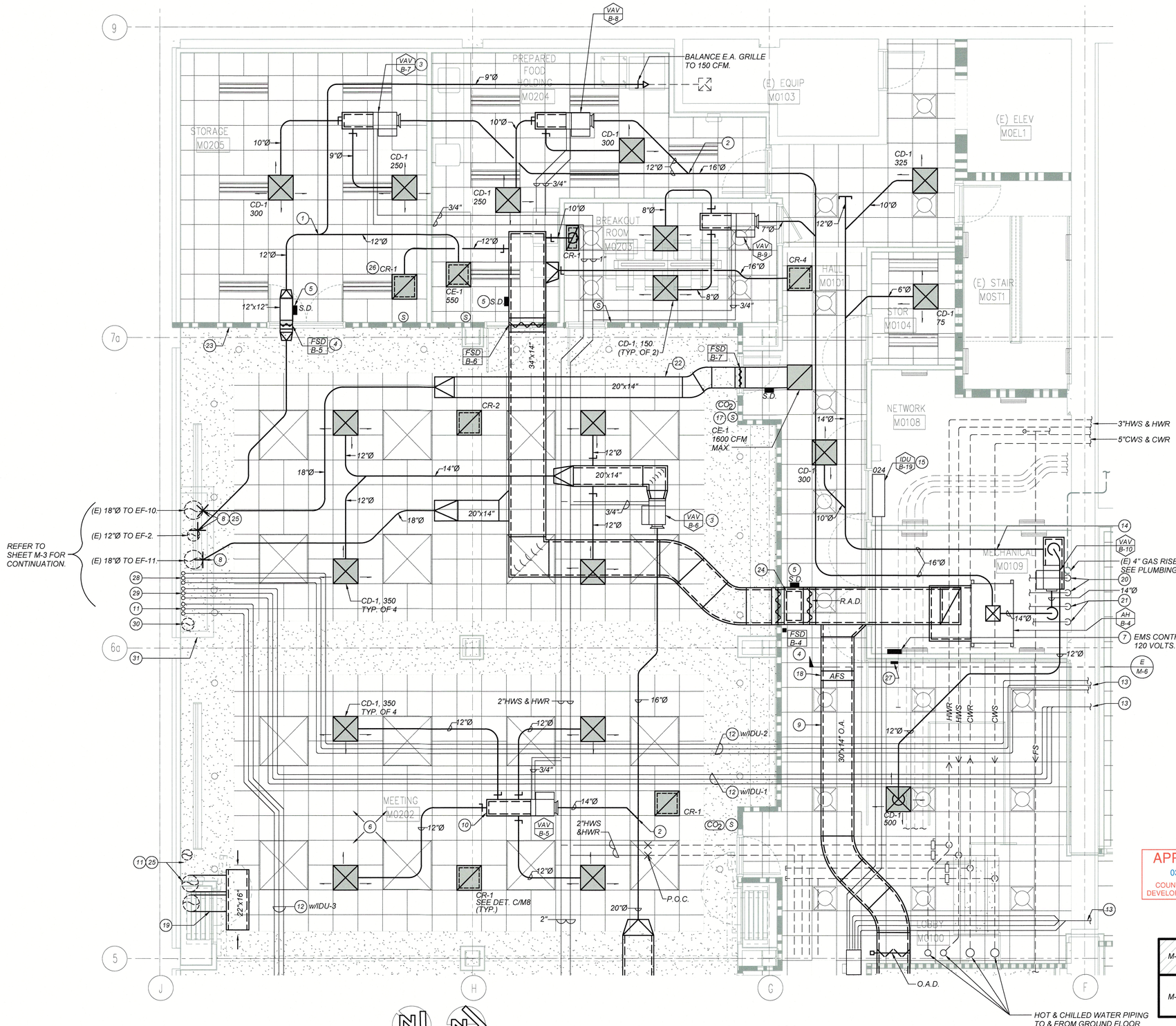

TRUE NORTH

PROJECT NORTH

ENLARGED BASEMENT RCP PLAN

SCALE: 1/4"=1'-0"

APPROVED
03/17/2023
COUNTY OF FRESNO
DEVELOPMENT SERVICES

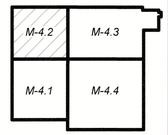

KEYPLAN:

THE COUNTY OF FRESNO 1856

LICENSED ARCHITECT
JUSTIN DOUGLAS MURATORE
NO. C38020
RENEWAL: 8/23
STATE OF CALIFORNIA

MURATORE ASSOCIATES
1222 N SHAW AVE.
FRESNO, CA 93711
559-365-6554
info@muratoreassociates.com

CONSULTANT STAMP

REGISTERED PROFESSIONAL ENGINEER
M22588
RENEWAL 9-30-2023
MECHANICAL
STATE OF CALIFORNIA

LAWRENCE ENGINEERING GROUP
7084 N. Maple Ave., Suite 101
Fresno, CA 93720
(559) 431-0101
21003
FAX (559) 431-1362

APPROVED
AUG 29 2024
FRESNO FIRE DEPARTMENT

REVISION TABLE:

REV.	DESCRIPTION	DATE

DATE: 11/15/2022
SCALE: As indicated
JOB NUMBER:

ADDRESS:

BRIX & MERCER BLDGS
1221 FULTON ST
FRESNO, CA 93721

AHJ #: 21-1137 21-105379

PROJECT:

FRESNO COUNTY DEPT. OF PUBLIC HEALTH BASEMENT RENOVATION

SHEET TITLE:

ENLARGED BASEMENT HVAC PLAN

SHEET NUMBER

M-4.2

FILE PATH:

INTERNAL NUMBER: 829

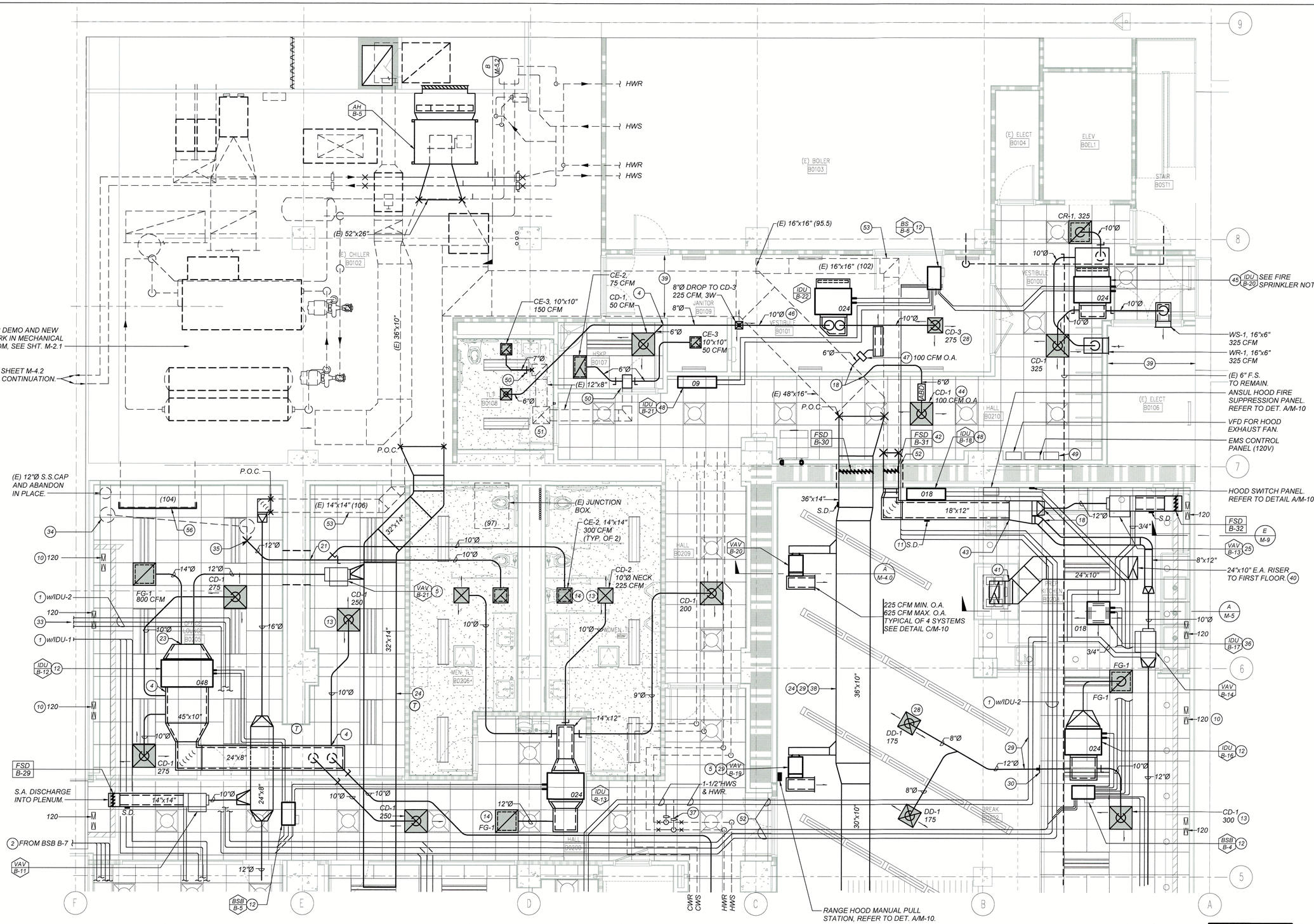

ENLARGED BASEMENT RCP PLAN

SCALE: 1/4"=1'-0"

TRUE NORTH

PROJECT NORTH

APPROVED
03/17/2023
COUNTY OF FRESNO
DEVELOPMENT SERVICES

REFER TO SHEET M-4.0 FOR M-4.3 AND M-4.4 KEYNOTES.

KEYPLAN:

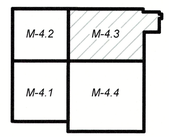

APPROVED
AUG 29 2024
FRESNO FIRE DEPARTMENT

REVISION TABLE:

REV.	DESCRIPTION	DATE

DATE: 11/15/2022
SCALE: As indicated
JOB NUMBER:

ADDRESS:

BRIX & MERCER BLDGS
1221 FULTON ST
FRESNO, CA 93721

AHJ #: 21-1137 21-105379

PROJECT:

FRESNO COUNTY DEPT. OF PUBLIC HEALTH BASEMENT RENOVATION

SHEET TITLE:

ENLARGED BASEMENT HVAC PLAN

SHEET NUMBER

M-4.3

LICENSED ARCHITECT JUSTIN DOUGLAS MURATORE NO. C38020 RENEWAL: 6/25 STATE OF CALIFORNIA

MURATORE ASSOCIATES
222 N SHAW AVE. FRESNO, CA 93711
559-326-6934 info@muratoreassociates.com

CONSULTANT STAMP

REGISTERED PROFESSIONAL ENGINEER MICHAEL D. CANNON M23566 REN. 9-30-2023 MECHANICAL STATE OF CALIFORNIA

LAWRENCE ENGINEERING GROUP
7084 N. Maple Ave., Suite 101 Fresno, CA 93720
(559) 431-0101 21003 FAX (559) 431-1362

FILE PATH:

INTERNAL NUMBER: 829

ENLARGED BASEMENT RCP PLAN

SCALE: 1/4"=1'-0"

TRUE NORTH

PROJECT NORTH

REFER TO SHEET M-4.0 FOR M-4.3 AND M-4.4 KEYNOTES.

ENLARGE (E) OPENING TO ACCOMMODATE NEW DUCT.

SMOKE DETECTOR IS WITHIN 66" OF FSD B-26 AND B-27 AND SERVES AS A MONITOR FOR BOTH

REFER TO SIMILAR SECTION E/M-9.

APPROVED
03/17/2023
COUNTY OF FRESNO
DEVELOPMENT SERVICES

APPROVED
AUG 29 2024
FRESNO FIRE DEPARTMENT

KEYPLAN:

M-4.2 | M-4.3
M-4.1 | M-4.4

THE COUNTY OF FRESNO 1856

LICENSED ARCHITECT
JUSTIN DOUGLAS MURATORE
NO. C38020
RENEWAL: 8/23
STATE OF CALIFORNIA

MURATORE ASSOCIATES
222 N SHAW AVE.
FRESNO, CA 93711
559-326-6554
info@muratoreassociates.com

CONSULTANT STAMP

REGISTERED PROFESSIONAL ENGINEER
MICHAEL D. CAVIN
M23555
REN. 9-30-2023
MECHANICAL
STATE OF CALIFORNIA

LAWRENCE ENGINEERING GROUP
7084 N. Maple Ave., Suite 101
(559) 431-0101
21003
Fresno, CA 93720
FAX (559) 431-1362

REVISION TABLE:

REV.	DESCRIPTION	DATE

DATE: 11/15/2022
SCALE: As indicated
JOB NUMBER:

ADDRESS:
BRIX & MERCER BLDGS
1221 FULTON ST
FRESNO, CA 93721

AHJ #: 21-1137 21-105379

PROJECT:
FRESNO COUNTY DEPT. OF PUBLIC HEALTH BASEMENT RENOVATION

SHEET TITLE:
ENLARGED BASEMENT HVAC PLAN

SHEET NUMBER
M-4.4

INTERNAL NUMBER: 529

FILE PATH:

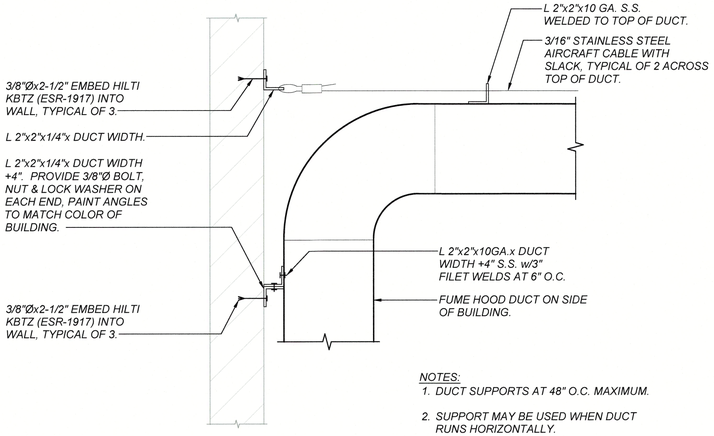

NOTES:

1. DUCT SUPPORTS AT 48" O.C. MAXIMUM.
2. SUPPORT MAY BE USED WHEN DUCT RUNS HORIZONTALLY.
3. NO SCREWS MAY PENETRATE DUCTWORK.

DUCT SUPPORT

C / M-5

SCALE: 1-1/2"=1'-0"

SEQUENCE OF OPERATION

Air conditioning for the Brix Break Room consists of five VRF fan coils and a range hood exhaust system. The range hood exhaust system operates at low speed (900 CFM) during occupied hours to offset outside air introduced into the space. When there is a cooking demonstration and the electric range is used, the range hood exhaust fan goes to high speed (2,500 CFM) and (4) VAV terminals open to let more outdoor air into the space to maintain neutral room pressurization. The up/down ramping of VFD needs to react slowly to approximate VAV operation.

The hood exhaust is manually started with a switch (in the Control Panel, CP-1) that instructs (through the EMS) the EF-7 VFD to go to high speed (refer to Control Diagram A/M-10).

In conjunction with the air balancer, measure the motor amps (FLA-1) at full-speed CFM to establish a baseline value of a clean-filter system. Block off the fan discharge so than fan delivers 2,200 CFM. This is FLA-2. Record values on the Air Balance Report.

If after startup, the motor amps are greater than FLA-2, the system is delivering adequate airflow to safely operate the electric range, and a green pilot will be lit. If the motor amps are less than FLA-2, the system is partially blocked, and a red pilot will be lit.

With the exception of the hood lights, I/O components of CP-1 are interfaced with the EMS controller.

If a fire at the hood trips the fusible link at the Ansul Control Panel, the following will occur:

1. Fire retardant agent will discharge into the hood.
2. A contact will close sending a signal to the Fire Alarm Panel.
3. A contact will close sending a signal to the EMS (information only).

The Fire Alarm Panel will respond and do the following:

1. Activate a relay killing power to the electric range.
2. Activate a relay forcing the exhaust fan VFD to high speed (to purge the space).
3. Stop the AH/B-5 and the IDUs putting the Basement into a Passive System.

During testing, ensure that the Break Room doors can be opened due to the room negative pressure.

BREAK ROOM SEQUENCE OF OPERATION

D / M-5

SCALE: NONE

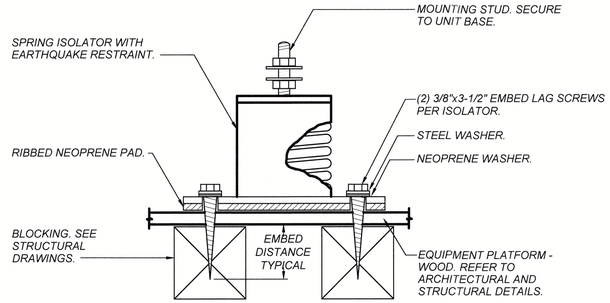

SPRING ISOLATOR ON WOOD PLATFORM

E / M-5

SCALE: NONE

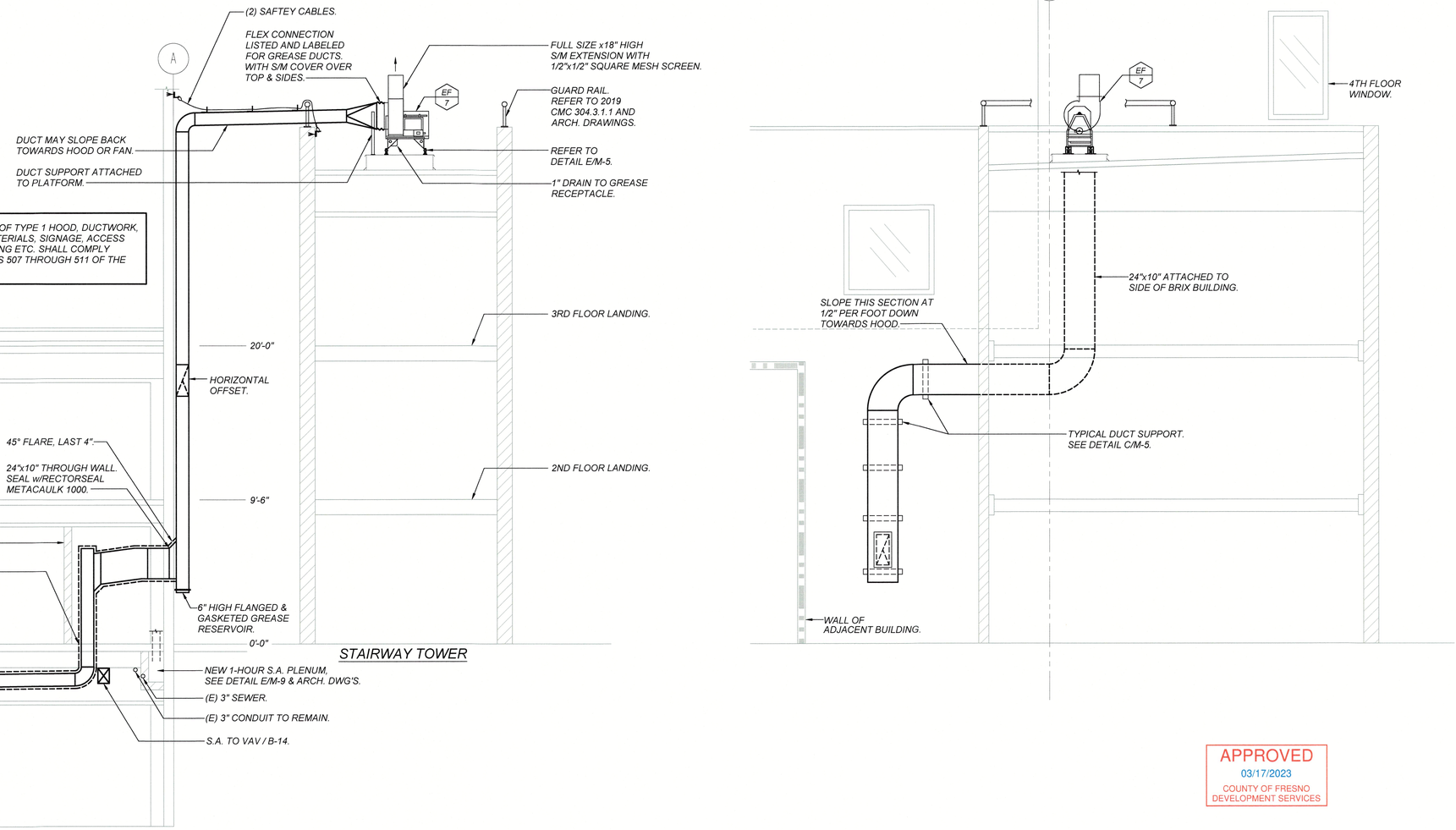

APPROVED
03/17/2023
COUNTY OF FRESNO
DEVELOPMENT SERVICES

SECTION AT BRIX BREAK ROOM

A / M-5

SCALE: 1/4"=1'-0"

SECTION AT STAIRS

B / M-5

SCALE: 1/4"=1'-0"

FILE PATH:

THE COUNTY OF FRESNO 1856

LICENSED ARCHITECT JUSTIN DOUGLAS MURATORE NO. C38020 RENEWAL: 8/25 STATE OF CALIFORNIA

MURATORE ASSOCIATES
1222 N SHAW AVE. FRESNO, CA 93711
559-326-9534
info@muratoreassociates.com

CONSULTANT STAMP

REGISTERED PROFESSIONAL ENGINEER MICHAEL D. CAMPBELL M23588 REN. 9-30-2023 MECHANICAL STATE OF CALIFORNIA

LAWRENCE ENGINEERING GROUP
7084 N. Maple Ave., Suite 101 (559) 431-0101
21003
Fresno, CA 93720 FAX (559) 431-1362

APPROVED
AUG 29 2024
FRESNO FIRE DEPARTMENT

REVISION TABLE:

REV.	DESCRIPTION	DATE

DATE: 11/15/2022
SCALE: As indicated
JOB NUMBER:

ADDRESS:

BRIX & MERCER BLDGS
1221 FULTON ST
FRESNO, CA 93721

AHJ #: 21-1137 21-105379

PROJECT:

FRESNO COUNTY DEPT. OF PUBLIC HEALTH BASEMENT RENOVATION

SHEET TITLE:

ENLARGED BASEMENT HVAC PLAN

SHEET NUMBER

M-5

INTERNAL NUMBER: 829

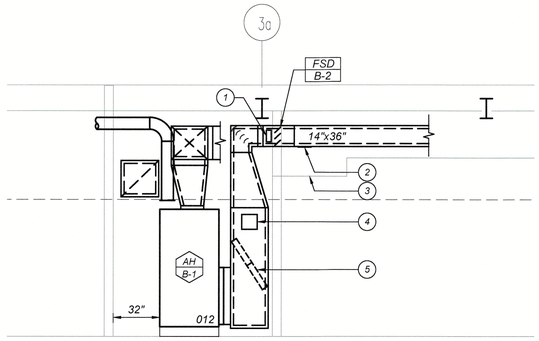

KEYNOTES:

1. FSD actuator.
2. FSD duct access panel. An access panel is also required in the soffit.
3. Meeting Room soffit at 8'-6".
4. Duct detector, see Electrical drawings. Detector must be within 5' of FSD/B-2.
5. Shop-fabricated filter rack with side access and door.

SECTION

SCALE: 1/4"=1'-0"

A / M-6

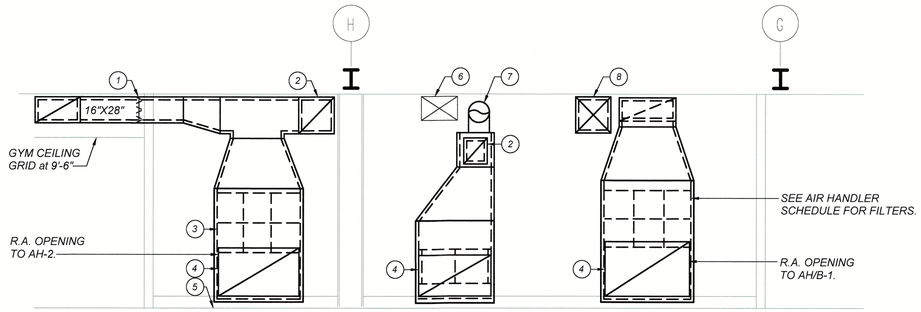

KEYNOTES:

1. Return air damper.
2. O.A. connection to mixed-air plenum.
3. Side-access filters in shop fabricated filter rack. Provide hinged door with latch. See Air Handler Schedule, Sheet M-1.1, for size and specifications.
4. R.A. opening at air handler.
5. R.A. duct supported from slab, typical.
6. S.A. duct in foreground.
7. 14" diameter from corridor grille.
8. S.A. duct to Meeting Rooms.

SECTION AT AIR HANDLER RETURN AIR DUCTS

SCALE: 1/4"=1'-0"

B / M-6

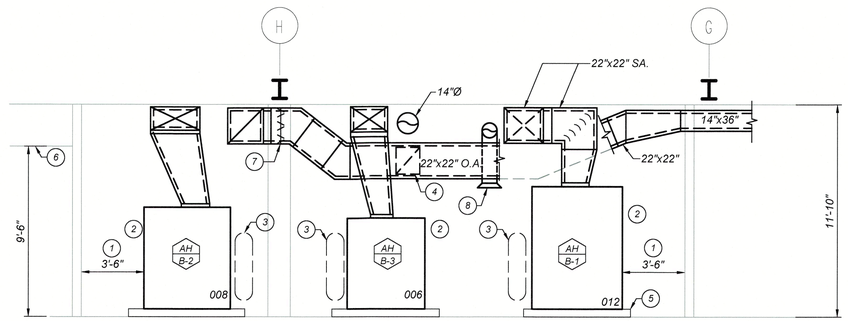

KEYNOTES:

1. Clearance shown is minimum.
2. Fan motor access. Filter access is on same side.
3. Hot and chilled water coil connections per Detail B/M-7. Chilled water piping for AH/B-1 shall be 2", all other hot and chilled piping shall be 1-1/2".
4. Outdoor Air duct, beyond.
5. Manufacturer's 6" high base rail, typical. See 3/S1.02 for anchorage of rail to concrete slab.
6. Activity Room ceiling height.
7. O.A. damper for AH/B-2.
8. Mechanical Room supply air diffuser with 10" diameter neck and bottom of diffuser at finished floor +7'-0". Refer to Detail A/M-8. Supply duct does not require insulation.

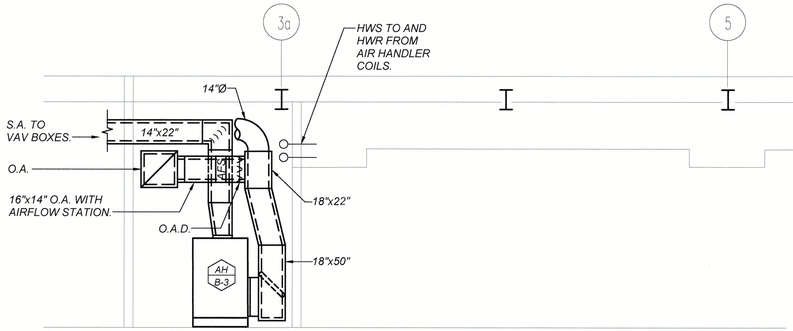

SECTION AT AH / B-3

SCALE: 1/4"=1'-0"

C / M-6

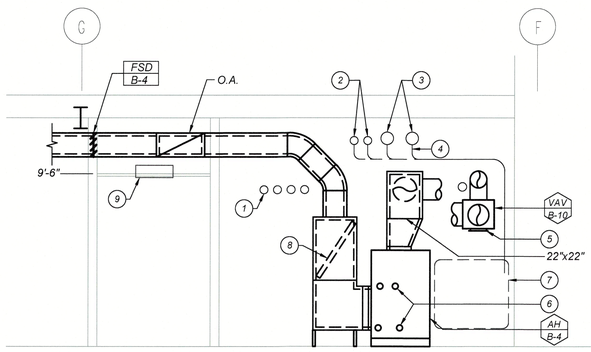

KEYNOTES:

1. Existing electrical conduits to remain.
2. Existing hot water piping to remain.
3. Existing chilled water piping to remain.
4. 1-1/2" HW and CW branch piping, tapped off mains, secured to wall, and routed to manifolds. Provide 3/4" HW branch piping to VAV box.
5. CD-2 with 8" diameter neck in bottom of plenum. Adjust to 75 CFM.
6. Manufacturer's HW and CW coil connections on opposite side.
7. HW coil manifold (refer to Detail B/M-7), CW coil manifold (refer to Detail B/M-7), and VAV reheat piping (refer to Detail D/M-7) attached to north and/or east wall of mechanical room.
8. (6) 20"x20"x2" MERV-13 filters in shop-fabricated filter rack.
9. Light fixture, see Electrical.

SECTION AT FRONT OF AIR HANDLERS

SCALE: 1/4"=1'-0"

D / M-6

APPROVED
03/17/2023
COUNTY OF FRESNO
DEVELOPMENT SERVICES

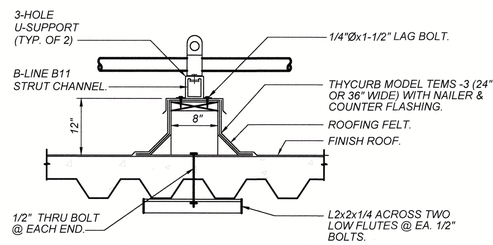

SECTION

NOTE:
1. REMOVE ROOFING & INSULATION BELOW ROOF DOWN TO TOP OF CONCRETE.

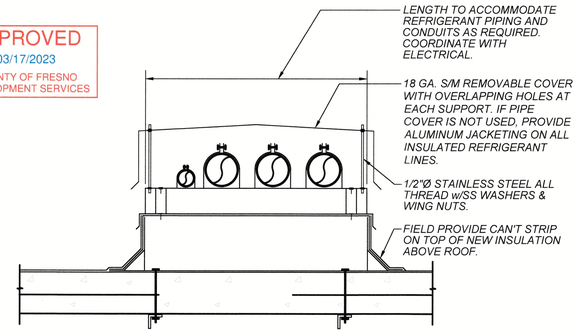

ELEVATION

SECTION AT AH / B-4

SCALE: 1/4"=1'-0"

E / M-6

REFRIGERANT PIPE SUPPORTS ON ROOF.

SCALE: NONE

F / M-6

FILE PATH:

THE COUNTY OF FRESNO 1856

LICENSED ARCHITECT
JUSTIN DOUGLAS MURATORE
NO. C38020
RENEWAL 6/23
STATE OF CALIFORNIA

MURATORE ASSOCIATES
1222 N SHAW AVE.
FRESNO, CA 93711
559-565-6934
info@muratoreassociates.com

CONSULTANT STAMP

REGISTERED PROFESSIONAL ENGINEER
RUSSELL D. LAWRENCE
M22588
REN. 9-30-2023
MECHANICAL
STATE OF CALIFORNIA

LAWRENCE
ENGINEERING GROUP
7084 N. Maple Ave., Suite 101
(559) 431-0101
21003
Fresno, CA 93720
FAX (559) 431-1362

APPROVED
AUG 29 2024
FRESNO FIRE DEPARTMENT

REVISION TABLE:

REV.	DESCRIPTION	DATE

DATE: 11/15/2022
SCALE: As indicated
JOB NUMBER:

ADDRESS:

BRIX & MERCER BLDGS
1221 FULTON ST
FRESNO, CA 93721

AHJ #: 21-1137 21-105379

PROJECT:

FRESNO COUNTY DEPT. OF PUBLIC HEALTH BASEMENT RENOVATION

SHEET TITLE:

SECTIONS

SHEET NUMBER

M-6

INTERNAL NUMBER: 829

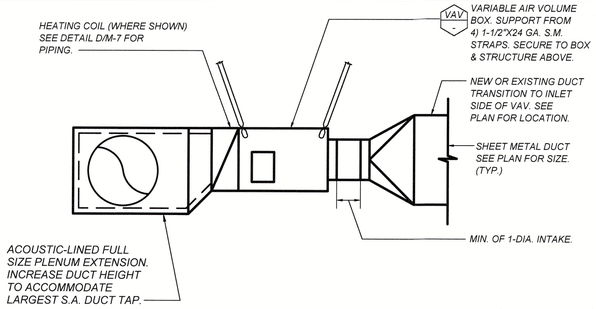

VAV BOX MOUNTING

E / M-7

SCALE: NONE

KEYNOTES:

1. AIR VENT AND PETCOCK DRAIN PIPING TO CONDENSATE PAN.
2. PETE'S PLUG, SEE PETE'S PLUG NOTE.
3. CONTROL VALVE WITH REDUCERS AND INCREASERS AS REQUIRED. FURNISH UNIONS OR FLANGES FOR VALVE REMOVAL.
4. UNION, TYPICAL. PROVIDE REDUCERS AND INCREASERS AS REQUIRED.
5. COMBINATION BALANCING/SHUTOFF VALVE WITH MEMORY STOP.
6. THERMOMETER AND WELL, SEE SPECS.
7. STRAINER WITH BLOWDOWN VALVE AND 3/4" HOSE END CONNECTION.
8. COIL ISOLATION VALVES.
9. SHUT OFF VALVE. LOCATE CLOSE TO MAINS.
10. BRANCH PIPING TO COILS SHALL EQUAL MFR'S COIL SIZE UNLESS OTHERWISE NOTED.

PETE'S PLUG NOTE (Typical)
Pete's Plugs, or other devices with serviceable parts, must extend at least 1/2" beyond pipe insulation. Use extended length Pete's Plugs if required. Provide vapor barrier continuity by sealing opening with reinforcing mesh, one coat of lagging adhesive, and a final coat of vapor barrier coating. Provide same sealing method on insulation without a vapor barrier.

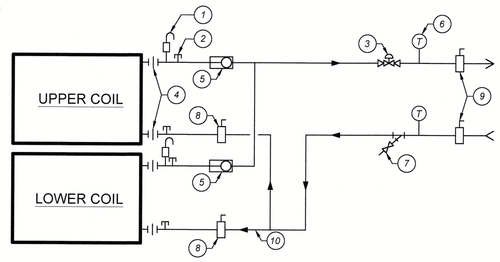

HOT OR CHILLED WATER COIL

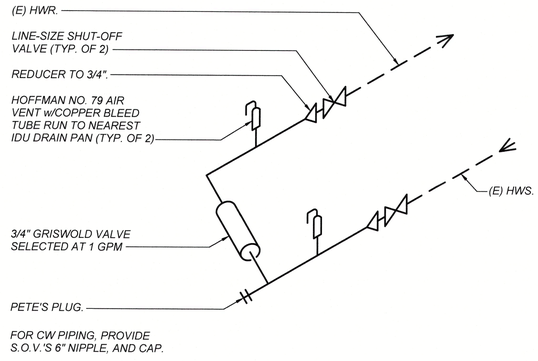

STACKED COIL PIPING CONNECTIONS FOR AH / B-5

F / M-7

SCALE: NONE

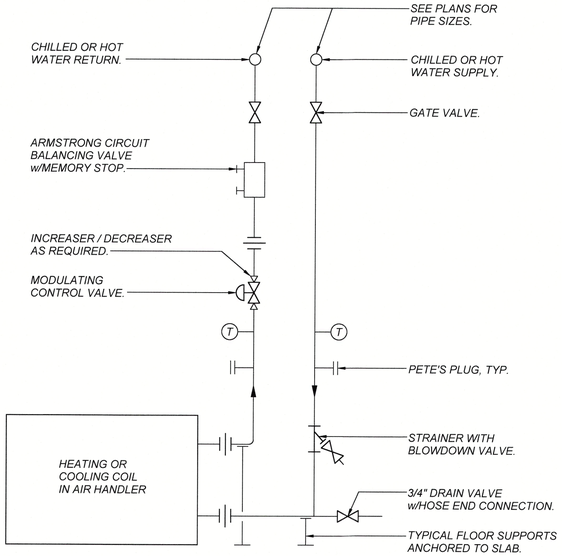

AIR HANDLER COIL CONNECTIONS

B / M-7

DIAGRAMMATIC

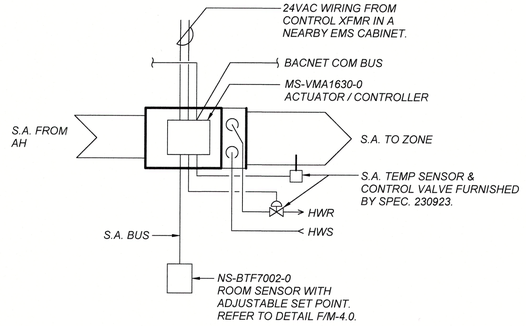

END-OF-LINE CONNECTION

G / M-7

SCALE: NONE

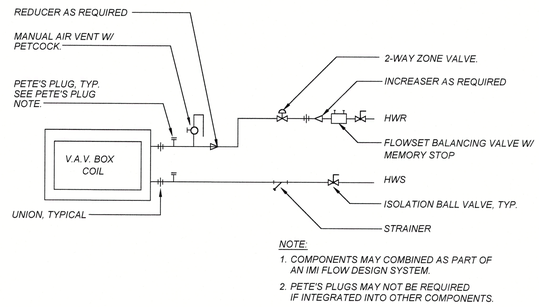

NOTE:
1. COMPONENTS MAY COMBINED AS PART OF AN IMI FLOW DESIGN SYSTEM.
2. PETE'S PLUGS MAY NOT BE REQUIRED IF INTEGRATED INTO OTHER COMPONENTS.

TYPICAL VAV CONTROL

C / M-7

SCALE: N.T.S.

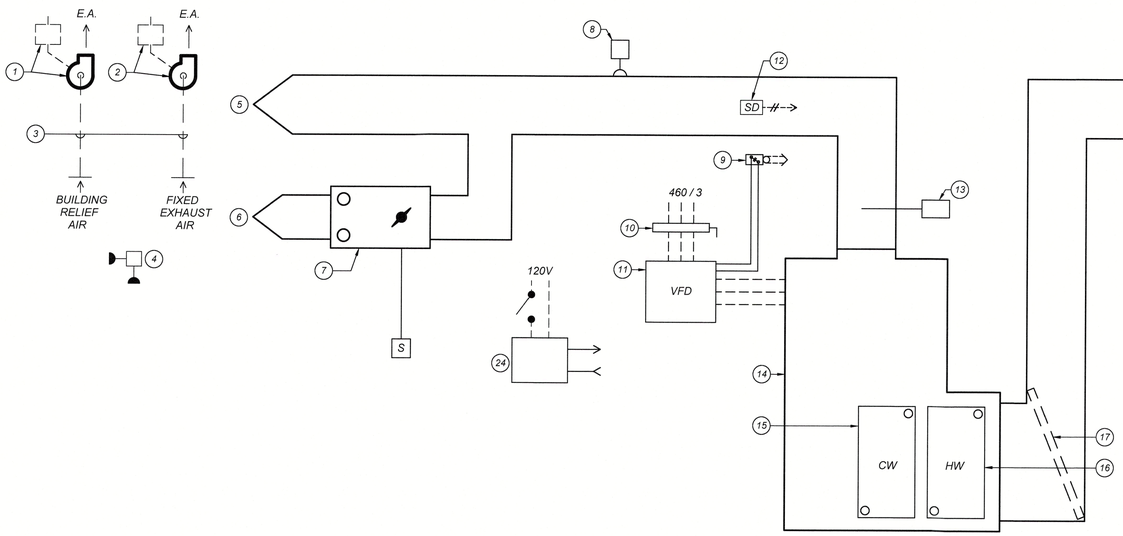

VAV BOX COIL DETAIL

D / M-7

SCALE: NONE

KEYNOTES:

1. Exhaust fan(s) and starter system(s), to remain. Fans work in conjunction with room pressure sensors (Keynote 4) to relief excess air.
2. Exhaust fan and starter system which are connected to fixed exhausts grilles.
3. Existing exhaust ducts, in rated shaft, extending to the roof shall remain.
4. Room static pressure sensors.
5. Supply air to other VAV boxes. AH-2 has no VAV terminals.
6. Supply air to zone.
7. Typical VAV terminal with reheat coil, DDC controller, and room temperature readout with adjustable set point. Refer to Details C, D, and E, this sheet.
8. Duct supply air pressure static sensor and wiring back to EMS. Pressure is used to control fan speed.
9. Fire alarm relay which interrupts VFD enable in case of a Basement alarm. Wiring from VFD to duct detector by Specification Section 250900.
10. Typical power and disconnect switch by Electrical.
11. Typical VFD furnished under Specification Section 250900.
12. Duct detector notifies Fire Alarm Panel when smoke is detected. See Electrical Drawings and Sheet M-15
13. Supply air temperature sensor.
14. Typical Mercer air handler. AH-1, AH-3, and AH-4 are variable air volume. There are no VAV terminals on AH-2, but the supply air volume may vary at the air handler.
15. Chilled water coil. Refer to Detail B, this sheet.
16. Hot water coil. Refer to Detail B, this sheet.
17. Duct mounted MERV-13 filters, typical.
18. R.A. damper and actuator. Refer to plans to determine if R.A. and O.A. dampers are linked.
19. Outdoor air airflow station used to maintain a minimum O.A. CFM. The device shall be the thermistor type and must be removable and/or accessible for cleaning because O.A. is unfiltered.
20. O.A. damper and actuator. Damper closes to the O.A. when air handler is OFF.
21. Return air temperature sensor.
22. Outdoor air temperature sensor. This sensor is global and used for Mercer air handlers.
23. Existing O.A. drop common to other air handlers on the floors above. Pressure at this point may exceed -1.2" w.c. and the temperature may be less than 30 degrees.
24. Typical air handler EMS controller, in cabinet, with transformer, fuses, input/output wiring, BACnet communications, etc. by Specification Section 250900.

APPROVED
03/17/2023
COUNTY OF FRESNO
DEVELOPMENT SERVICES

TYPICAL MERCER AIR HANDLER

A / M-7

SCALE: NONE

FILE PATH:

COUNTY OF FRESNO 1856

LICENSED ARCHITECT JUSTIN DOUGLAS MURATORE NO. C38020 RENEWAL: 6/23 STATE OF CALIFORNIA

MURATORE ASSOCIATES
1222 H SHAW AVE FRESNO, CA 93711
559-369-6934
info@muratoreassociates.com

CONSULTANT STAMP

REGISTERED PROFESSIONAL ENGINEER DARREL D. CANFIELD No. 22588 REN. 9-30-2023 MECHANICAL STATE OF CALIFORNIA

LAWRENCE ENGINEERING GROUP
7084 N. Maple Ave., Suite 101 Fresno, CA 93720
(559) 431-0101 21003 FAX (559) 431-1362

APPROVED
AUG 20 2024
FRESNO FIRE DEPARTMENT

REVISION TABLE:

REV.	DESCRIPTION	DATE

DATE: 11/15/2022
SCALE: As indicated
JOB NUMBER:

ADDRESS:
BRIX & MERCER BLDGS
1221 FULTON ST
FRESNO, CA 93721

AHJ #: 21-1137 21-105379

PROJECT:
FRESNO COUNTY DEPT. OF PUBLIC HEALTH BASEMENT RENOVATION

SHEET TITLE:
DETAILS

SHEET NUMBER
M-7

INTERNAL NUMBER: 829

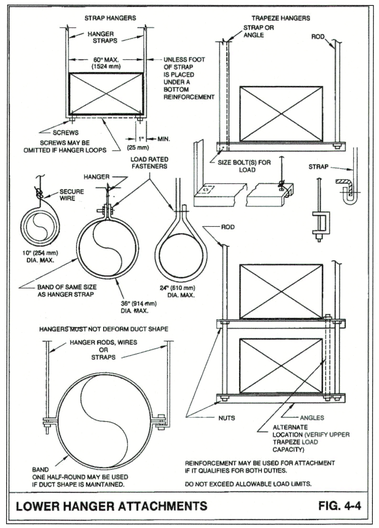

LOWER HANGER ATTACHMENTS FIG. 4-4

DUCT SUPPORT DETAIL

SCALE: NONE

H M-8

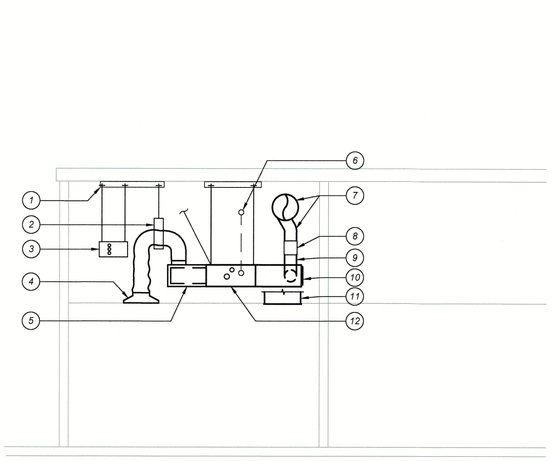

SECTION

SCALE: 1/4"-1'-0"

E M-8

KEYNOTES

1. Construction channel secured to concrete deck with 3/8" diameter Hilti KBTZ concrete anchor w/2" minimum embed, typical of 3 per channel.
2. Flexible duct support and strap to structure. Five feet of flex duct, maximum. Refer to Specifications, DUCTWORK INSTALLATION.
3. Branch Selector Box, BSB. Refer to typical Detail G/M-8.
4. Flex duct connection to round-neck diffuser. Duct size equals neck size unless otherwise shown. Refer to Detail A/M-8.
5. Supply air plenum internally lined. Minimum inside clear height shall be 10".
6. Pumped condensate drain. Refer to Plumbing Drawings. Refer to IDU Schedules for which units are pumped.
7. Sheet metal duct for tempered outdoor air from AH/B-5. No insulation required on Brix side, tempered O.A. duct.
8. Greenheck Model ABD automatic balancing damper. Damper regulates O.A. CFM to +/- 10% when the upstream pressure is between 0.2 and 2.0 in w.c. Refer to IDU schedules for O.A. CFM. Damper size equals duct size unless otherwise shown. When O.A. CFM exceeds ABD capacity, a VAV box, set for constant volume, is required. A branch damper from the tempered O.A. duct to the IDU return plenum is not required.
9. Tempered, O.A. flex duct to IDU R.A. plenum.
10. Return air plenum. Insulation may be lined or external.
11. Filter/return grille beyond. Return air duct size matches supply duct size unless otherwise noted. Refer to Detail B/M-8.
12. Typical IDU. Refer to Detail for G/M-8 for support.

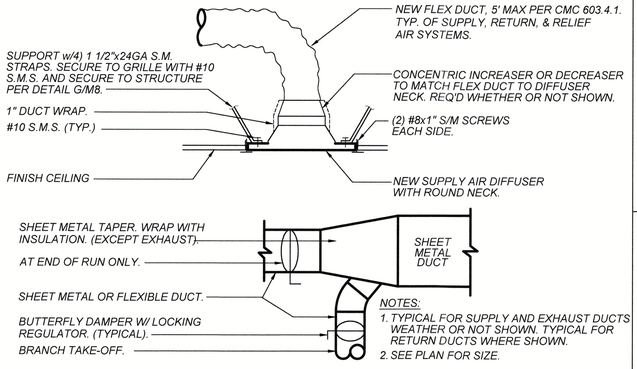

SUPPLY AIR PLENUM AND BRANCH DUCTS

SCALE: NONE

A M-8

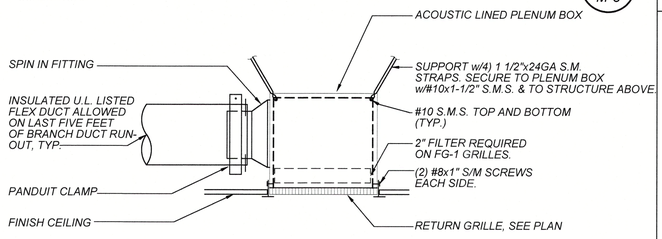

RETURN AIR GRILLE w/FILTER

SCALE: NONE

B M-8

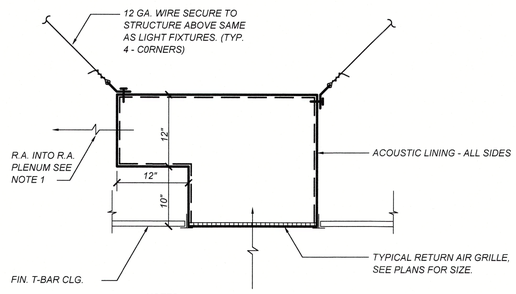

NOTES:
1. POSITION R.A. OPENINGS IN PLENUM SUCH THAT ANY TWO OPENINGS FACING EACH OTHER MUST BE GREATER THAN 20' APART.

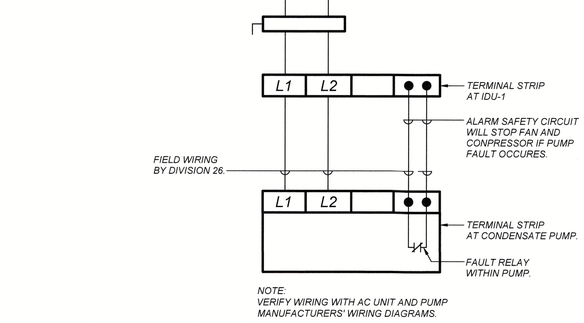

PUMP/FLOAT SWITCH INTERLOCK

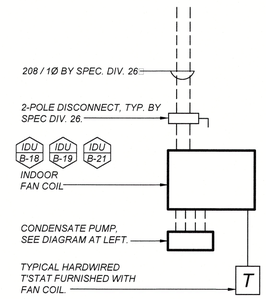

SPLIT SYSTEM WIRING

HIGH-SIDE WALL SPLIT SYSTEM CONTROL

SCALE: NONE

F M-8

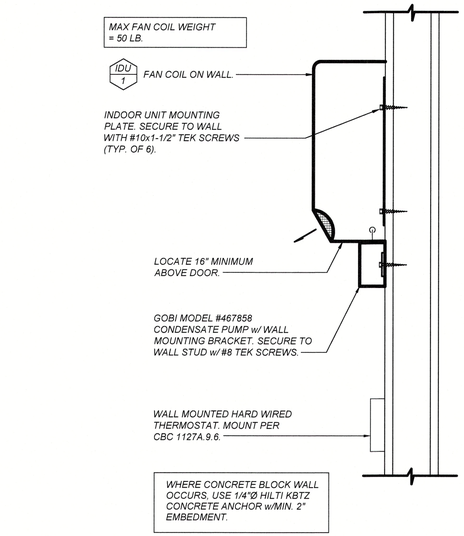

INDOOR UNIT - WALL CASSETTE

SCALE: NONE

J M-8

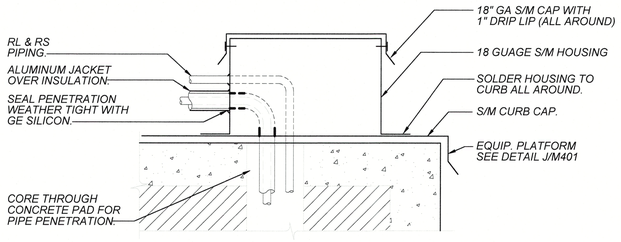

INSULATED PIPE ROOF PENETRATION

SCALE: NONE

K M-8

APPROVED
03/17/2023
COUNTY OF FRESNO
DEVELOPMENT SERVICES

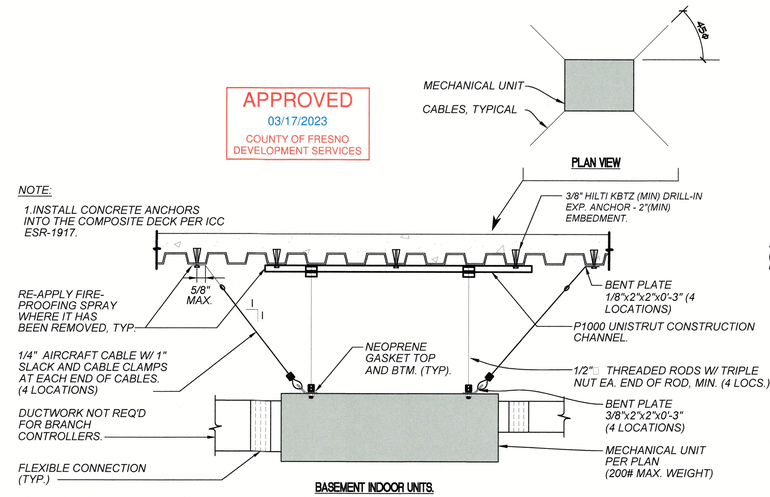

INDOOR UNIT /BRANCH CONTROLLER MOUNTING

SCALE: NONE

G M-8

RETURN AIR PLENUM

SCALE: NONE

C M-8

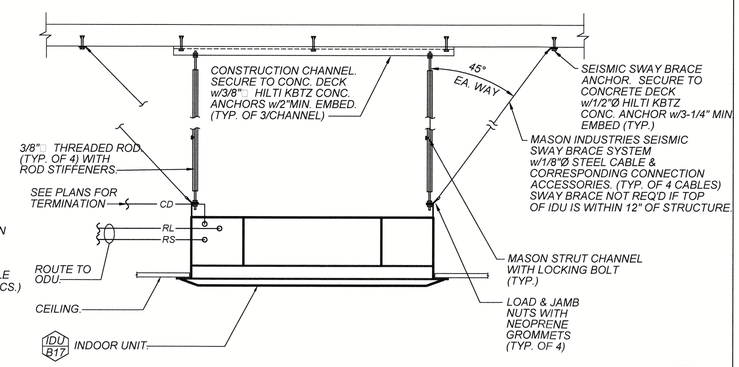

INDOOR UNIT - CEILING CASSETTE

SCALE: NONE

D M-8

THE COUNTY OF FRESNO 1856

LICENSED ARCHITECT JUSTIN DOUGLAS HURATORE NO. C38020 RENEWAL: 6/23 STATE OF CALIFORNIA

MURATORE ASSOCIATES
1222 N SHAW AVE. FRESNO, CA 93711
559-348-6934 info@muratoreassociates.com

CONSULTANT STAMP

REGISTERED PROFESSIONAL ENGINEER MICHAEL D. CHRISTIAN M22588 REN. 9-30-2023 MECHANICAL STATE OF CALIFORNIA

LAWRENCE ENGINEERING GROUP
7084 N. Maple Ave., Suite 101 Fresno, CA 93720
(559) 431-0101 21003 FAX (559) 431-1362

APPROVED
AUG 29 2024 BY
FRESNO FIRE DEPARTMENT

REVISION TABLE:

REV.	DESCRIPTION	DATE

DATE: 11/15/2022
SCALE: As indicated
JOB NUMBER:

ADDRESS:
BRIX & MERCER BLDGS
1221 FULTON ST
FRESNO, CA 93721

AHJ #: 21-1137 21-105379

PROJECT:
FRESNO COUNTY DEPT. OF PUBLIC HEALTH BASEMENT RENOVATION

SHEET TITLE:
DETAILS

SHEET NUMBER
M-8

INTERNAL NUMBER: 828

FILE PATH:

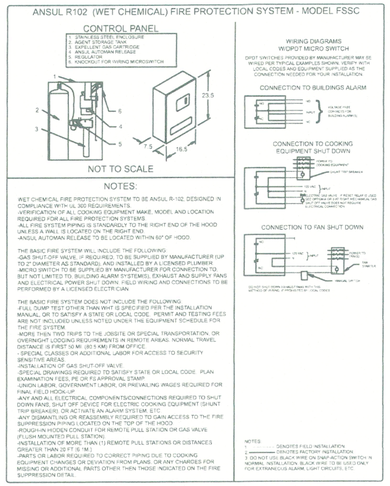

HOOD FIRE PROTECTION SYSTEM

SCALE: NONE

C / M-9

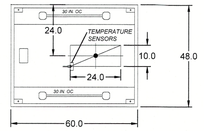

MARK: KH-1 - SECTION 1
PLAN VIEW

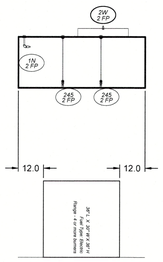

MARK: KH-1 - SECTION 1
ELEVATION VIEW

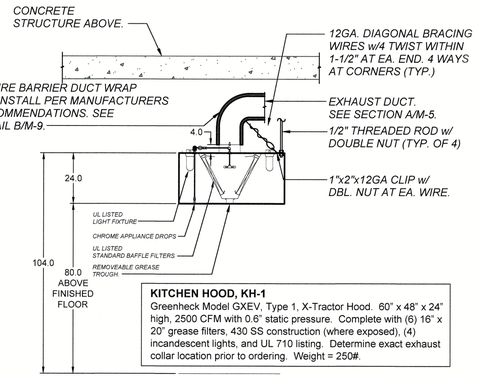

KITCHEN HOOD, KH-1
Greenheck Model GXEV, Type 1, X-Tractor Hood. 60" x 48" x 24" high, 2500 CFM with 0.6" static pressure. Complete with (6) 16" x 20" grease filters, 430 SS construction (where exposed), (4) incandescent lights, and UL 710 listing. Determine exact exhaust collar location prior to ordering. Weight = 250#.

MARK: KH-1
SECTION VIEW

KITCHEN HOOD

SCALE: NONE

D / M-9

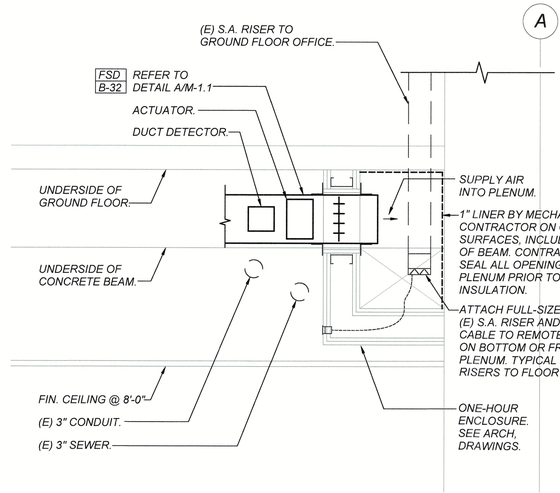

SECTION AT 1-HOUR SUPPLY-AIR PLENUM

SCALE: 1"=1'-0"

E / M-9

PARTIAL GROUND FLOOR MECHANICAL PLAN

SCALE: NONE

A / M-9

LEGEND	
1	Two layers Fire Barrier 615+ Duct Wrap
2	3/4" Wide Filament tape
3	1/2" Steel Banding
4	3" perimeter Overlap
5	3" longitudinal Overlap
6	Min. 1/2" diameter
7	1-1/2"x1-1/2"x1/8" angle

DUCT WRAP & HANGERS

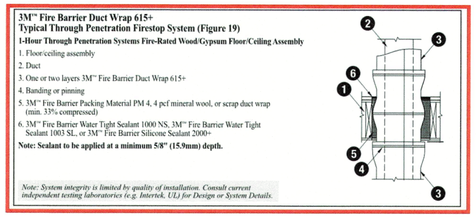

THROUGH PENETRATION DETAIL

3M FIRE WRAP - DUCT WRAP DETAILS

SCALE: NONE

B / M-9

INSTALL FIRE BARRIER 615+ DUCT WRAP IN STRICT ACCORDANCE WITH MANUFACTURER'S INSTRUCTIONS AND RECOMMENDATIONS.

SUGGESTED INSTALLATION FOR TERMINATION OF DUCT WRAP AT NON-RATED HOOD LOCATION

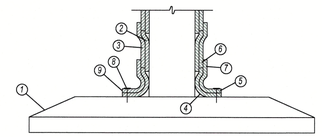

ROUND DUCT PATTERN:

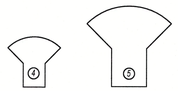

TWO REQUIRED FOR EACH SIDE

RECTANGULAR DUCT PATTERN:

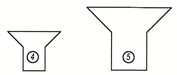

TWO REQUIRED FOR EACH SIDE

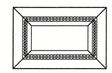

LEGEND	
1	Hood
2	1st layer Fire Barrier 615+ Duct Wrap
3	2nd layer Fire Barrier 615+ Duct Wrap
4	1st layer transition pattern Fire Barrier 615+ Duct Wrap
5	2nd layer transition pattern FireBarrier 615+ Duct Wrap
6	3" minimum overlap
7	Banding
8	Anchor fastner system
9	Bar stock 2" - 3" wide, 1/8" thick

APPROVED
03/17/2023
COUNTY OF FRESNO
DEVELOPMENT SERVICES

detail #

THE COUNTY OF FRESNO 1856

LICENSED ARCHITECT JUSTIN DOUGLAS MURATORE NO. C38020 RENEWAL: 6/23 STATE OF CALIFORNIA

MURATORE ASSOCIATES
1222 H SHAW AVE.
FRESNO, CA 93711
559-565-6634
info@muratoreassociates.com

CONSULTANT STAMP

REGISTERED PROFESSIONAL ENGINEER DARNELL D. CAVENDER M22586 REN. 9-30-2023 MECHANICAL STATE OF CALIFORNIA

LAWRENCE ENGINEERING GROUP
7084 N. Maple Ave., Suite 101
(559) 431-0101
21003
Fresno, CA 93720
FAX (559) 431-1362

APPROVED
AUG 29 2024
FRESNO FIRE DEPARTMENT

REVISION TABLE:

REV.	DESCRIPTION	DATE

DATE: 11/15/2022
SCALE: As indicated
JOB NUMBER:

ADDRESS:
BRIX & MERCER BLDGS
1221 FULTON ST
FRESNO, CA 93721

AHJ #: 21-1137 21-105379

PROJECT:
FRESNO COUNTY DEPT. OF PUBLIC HEALTH BASEMENT RENOVATION

SHEET TITLE:
DETAILS

SHEET NUMBER
M-9

INTERNAL NUMBER: 829

FILE PATH:

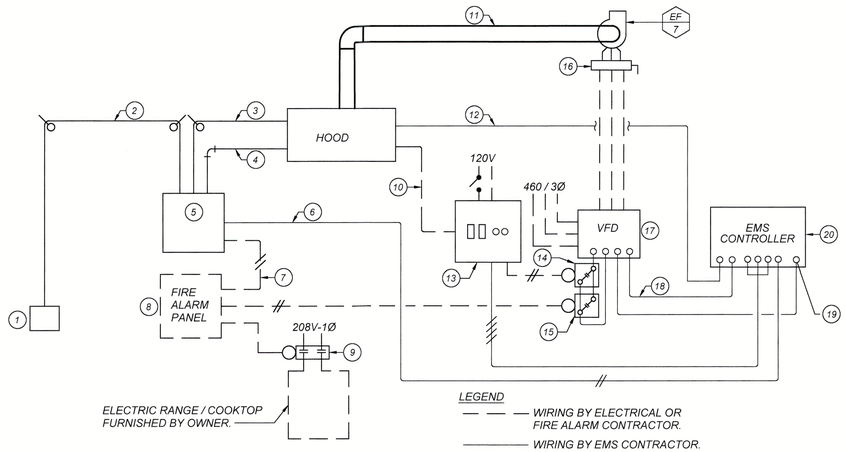

KEYNOTES:

1. Manual pull station furnished with hood. Mount at finished floor + 42" at point of egress.
2. Cable and pulley system for manual pull station.
3. Cable and pulley system from hood to Ansul panel.
4. Expellant gas line piping to hood.
5. Ansul R102 (wet chemical) fire protection system cabinet. See plans for location.
6. Wiring from dry contacts at Ansul panel to EMS. Completion of this circuit notifies the EMS that liquid fire suppressant was released, but the EMS does not take any action.
7. Wiring from "Alarm Initiating Switch" that the Ansul system was activated.
8. Fire Alarm Panel (see Electrical Drawings) with input/output (for this system) as follows:
   A. Input from Ansul panel
   B. Output to high-speed relay
   C. Output to range-hood-off relay
9. Fire alarm relay to disconnect Range/cooktop during a hood fire. See Electrical Drawings.
10. Wiring from CP-1 to hood lights by Division 16.
11. Grease hood exhaust ducting.
12. Wiring from hood temperature sensors to EMS. EMS to provide conversions as required to read the correct temperature. If the hood temperature exceeds 100 degrees, the EMS will switch the exhaust fan to high speed.
13. CP-1 switch panel mounted per Detail F/M-4.0. Provide with inputs/outputs as follows:
    A. Hood lights
    B. Fan ON high speed
    C. "Ready for Cooking" green pilot light
    D. "Not Ready for Cooling" reg pilot light
14. High-speed relay from CP-1.
15. High-speed relay if given a signal from the FAP. This relay must be furnished by the Fire Alarm Contractor.
16. Typical disconnect by Spec. Division 16.
17. VFD for hood exhaust fan furnish by EMS contractor. Furnish with BACnet card. If the auxiliary contact circuit is completed, the fan will go to high speed. High speed and low speed RPMs are field determined with coordination from the air balancing agency.

    At High and Low speeds with clean filters, record the amperage of EF motor. Through BACnet, the EMS shall the check the VFD and determine if the amperage is within +/- 20% of the original determined speed. If it is not, this may indicate a motor fault or dirty filters, and an ALARM will be issued to the system.
18. VFD enable from the EMS. The default start position is low speed.
19. BACnet wiring by EMS contractor.
20. EMS BACnet controller with the minimum interfaces as follows:
    A. VFD enable
    B. Hood temperature reading
    C. Fan ON switch from CP-1
    D. "Ready for cooking" light enable
    E. "Not ready for cooking" light enable

RANGE HOOD VENTILATION CONTROL

DIAGRAMATIC

A M-10

KEYNOTES:

1. *A portion of a nearby EMS controller using (1) digital input, (1) analog input, and (1) digital output. Provide a power source for the "DO" to activate a relay at the IDU. Wiring, sensors, power supplies, and relay shown shall be provided by the EMS contractor.*
2. *Occupancy sensor. Provide power from the EMS controller panel.*
3. *Wall plate temperature sensor.*
4. *Relay to interrupt the fan circuit at the IDU.*
5. *Hard-wired, room thermostat furnished with the IDU.*

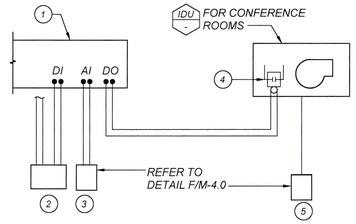

TYPICAL OF CONFERENCE ROOMS B0203, BO204, & B0211

CONFERENCE ROOM CONTROL

DIAGRAMATIC

B M-10

SEQUENCE OF OPERATION:

This sequence shuts off the IDU fan to save energy, it does not vary the Outdoor Air CFM to the room. AH/B-5 supplies Outdoor Air to this room during business hours.

The IDU shall operate one hour prior to occupancy to maintain set point temperature. At time of occupancy, the IDU shall shut OFF.

The IDU shall start if:

A. The occupancy sensor senses people, or if
B. The room temperature is outside the range of 68 to 76 degrees (software adjustable).

Once the IDU starts, it will stay ON for a period of 10 minutes. The EMS will then check for occupancy or temperature conditions to determine if the fan will stay ON.

BUILDING EMS POINTS LIST

Item	Point Description	Units	Point Type	Trend	Alarm	Totalize	Notes
Air Handlers (AH/B-1, AH/B-2, AH/B-3, AH/B-4)							
	Supply Fan Enable	Off On	DO	X			Hard wired
	Fan Status	Off On	DI	X	X	X	Through BACnet
	Fan Speed (to VFD)	%	AO	X			Through BACnet
	Supply Air Temperature	Deg F	AI	X	X		
	Return Air Temperature	Deg F	AI	X	X		
	Mixed Air Temperature	Deg F	AI	X	X		Not required for AH/B-5
	Chilled Water Control Valve	%	AO	X			
	Hot Water Control Valve	%	AO	X			
	Outside Air Airflow Station	CFM	AI	X			See Note 2
	Outside Air Damper	%	AO	X			
	Return Air Damper	%	AO	X			Not required for AH/B-5
	California Economizer Status	Working or Fault	DO	X	X		
	Downstream Duct Static Pressure	in. W.C.	AI	X	X		
	Total Supply Airflow	CFM	Calculation	X			Summation of VAV Boxes (N.A. to AH/B-2)
	Filter Status	in. W.C.	AI	X	X		
	Occupancy Sensor in room for AH/B-1	Occupied, Not Occupied	DI	X		X	To allow for CFM reduction
	Occupancy Sensor in room for AH/B-3	Occupied, Not Occupied	DI	X		X	To allow for CFM reduction
Air Handler AH/B-5							
	Supply Fan Enable	Off On	DO	X			Hard wired
	Fan Status	Off On	DI	X	X	X	Through BACnet
	Fan Speed (to VFD)	%	AO	X			Through BACnet
	Supply Air Temperature	Deg F	AI	X	X		
	Entering Air Temperature	Deg F	AI	X	X		
	Chilled Water Control Valve	%	AO	X			
	Hot Water Control Valve	%	AO	X			
	Outside Air Airflow Station	CFM	AI	X			
	Basement Isolation Damper, SD-40	Open Close	DO	X			
	Damper end switch - fully open	Open	DI				
	Damper end switch - fully closed	Closed	DI				
	Downstream Duct Static Pressure	in. W.C.	AI	X	X		
	Filter Status	in. W.C.	AI	X	X		
Typical VAV Box with Reheat							
	Air Volume Control	%	AO	X			
	Air Volume Monitor	CFM	AI	X			
	Leaving Air Temperature	Deg F	AI	X	X		
	Hot Water Control Valve	%	AO	X			
	Room Temperature Sensor with Adjustable Set Point	Deg F	AI	X	X		
Typical VAV Box for Volume Control Only							
	Air Volume Control	%	AO	X			
	Air Volume Monitor	CFM	AI	X			
VRF Systems							
	ODU-1 Status	Off On	DI	X			Through BACnet
	ODU-2 Status	Off On	DI	X			Through BACnet
	ODU-3 Status	Off On	DI	X			Through BACnet
	Interface EMS to iTouch Controller						Refer to Sheet M-11.2
General Building Existing Exhaust Fans, EF- 2, 5, 13							
	Fan Enable	Off On	DO	X			Field verify existing wiring
	Fan Status	Off On	DI	X	X		Current Sensor
Building Economizer Relief Fans - 3-phase (EF-4, 10, 11, 12)							See Note 3
	Fan Enable	Off On	DO	X			Hard wired
	Fan Status	Off On	DI	X	X	X	Through BACnet
	Speed Control	%					Through BACnet
Kitchen Hood Exhaust Fan, EF-7							See Detail A/M-10 for control
Ground Floor Temperature Control							
	Provide room thermostats on Ground Floor for IDU-B4 & IDU-B-5						See Note 4
	Provide room sensors for VAV/B-11, B-12, B-13, & B-14						See Note 4 and Detail C/M-7
Miscellaneous Mechanical Systems							
	Outside Air Temperature	Deg F	AI	X	X		Global in Mercer ductwork
	Mercer Network Room Temperature Sensor	Deg F	AI	X	X		Monitor only
	Conference Room Control (IDUs B-9, B-10, B-11)						See Detail B/M-10
	Occupancy Sensor	Off On	DI				
	IDU Disable	Off On	DO			X	
	Room Temperature	Deg F	AI	X			

NOTES:

1. For VAV terminals or IDUs serving the Ground Floor, replace the existing room sensor with a new sensor. Restore wall surfaces where existing sensors were removed.
2. Airflow station shall be the thermistor type because entering air is unfiltered. Airflow stations shall have access for cleaning.
3. Fans may be new or existing with new motors.
4. Remove existing controls on the Ground Floor and replace with new VRF or VAV room controllers. Locate new sensors or thermostats in the same location and patch wall.
5. This is a PARTIAL list. Other EMS points may be required by the Sequences of Operation.

EMS POINTS LIST

DIAGRAMATIC

D M-10

GENERAL

Failure of any device commanded to start shall signal an alarm and cause the next device in the sequence to start.

No more than 10 HP shall start at one time. This applies during any startup, including startup after power interruption. When new systems are installed on existing buildings with existing motors, allowance shall be made for existing motors. Provide a four second delay between motor startups.

Under Specification Section 230923, provide labor, tools, services, electrical connections and equipment required by the specifications, mechanical plans, control drawings, points list, and sequences of operations. A control device, shown or referenced once, is required; it may not be cross referenced. Devices requiring control shown on the mechanical plans, but which are not addressed by control references or the Mechanical Equipment Schedule, must be interlocked with and/or controlled by the EMS.

Control diagrams are diagrammatic and show the intent of a sequence, but not the exact details pertaining to all points of connection. Provide power supplies and control interfaces as required. If systems are designed to operate under Emergency Power or UPS, the EMS controllers must also function under these modes.

Where existing systems are replaced with new systems, existing control devices, linkages, supports, wiring, conduit, pneumatic tubing, etc. shall be removed on exposed walls. Existing conduit and wiring above hard ceilings which remain, may be abandoned in place.

Timing Sequences

The opening and closing of dampers and the starting (or ramping) of VFD-controlled motors often involves various time delay sequences to prevent over or under pressurizing rooms or ducts. These timing sequences shall be provided under Specification Section 230923.

Variable Frequency Drives

Variable Frequency Drives shall communicate with the EMS. Input information shall include start/stop and a signal to indicate the desired speed. Information returned to the EMS shall include output speed (in %). A start signal to ENABLE the VFD shall come from a hard-wired connection from the EMS or device, not through BACnet. Drives shall be ABB.

Field programming of VFDs shall be provided by the supplier of that equipment. Programming shall include ramping characteristics, setting the full-load amps for the connected motors, maximum speed, and other information as may be required to satisfy the sequences of operation. VFDs shall be set to ramp down slowly. Output speed signal of equipment with BACnet cards shall be reported by BACnet.

EMS Control Panels

When existing EMS controllers are reused (with new connections) or replaced, existing connected inputs and outputs must be reconnected. With new controllers, existing circuits must be reprogrammed to operate "as before" or as noted. Whether the controller is reused or replaced, all connections must be documented on the Control Drawings for this project. Locations of new panels shown on the drawings are approximate and require field verification. Power for the controller panel shall come from the A/C unit transformer with wiring and conduit by Specification 230923 unless otherwise noted on the drawings. Provide a separate transformer if required by controller and other connected loads. Power (24 VAC) for VAV terminals shall come from nearby EMS panels.

Current Sensors

For fan systems with current sensors, the EMS shall be able to detect the difference between a fan under load and one with a broken belt. Current sensors are required on the supply blower, each compressor, and exhaust/relief fans within new equipment. If airflow stations or another method will detect "no flow," then current sensors are not required.

EXHAUST FANS

Exhaust fans shall be interlocked as shown on the Mechanical Equipment Schedule or the Control Diagrams. Toilet room exhaust fans interlocked with the EMS shall follow the same schedule as the A/C system that supplies supply air to the toilet room.

In addition to controlling new exhaust fans, the EMS must be able to start/stop existing fans as shown on Sheet M-3.

AIR CONDITIONING SYSTEMS (General)

For the purposes of this section, "air conditioning systems" described below shall include, packaged air conditioners and unit heater. General sequences shall apply to all such systems unless otherwise noted. Systems not specifically defined with a control sequence shall follow the sequence of the most similar system.

Air conditioning systems shall start one hour prior to occupancy. O.A. dampers shall open to a minimum position to admit O.A. CFM as specified on the plans.

Optimal Start: Required per Section 120.2 (k)

When cold, outdoor conditions occur, the EMS may start the units more than one hour before occupancy.

Supply Fan Control

Whenever supply fans are shut down, outdoor air dampers and exhaust/relief dampers (when automatic) will close, and exhaust fans serving that zone shall also shut down.

Once started, the supply fans of air conditioning systems will remain ON until turned OFF by the EMS at the end of the day.

Each system may have an individual start and stop time. Exhaust fans on any zone served by an air conditioning system shall be interlocked with the air conditioner.

SEQUENCE OF OPERATION

DIAGRAMATIC

E M-10

Cooling

Unless otherwise specified, the first stage of cooling shall be with a mixture of return air and outside air as required to satisfy the cooling load. Provide temperature sensors to monitor supply air, return air, mixed air, and outdoor air.

Fire Alarm Shutdown: When Required by 2019 CMC Section 608.1

When any smoke or fire is detected by the Fire Alarm System, AH-1 through AH-5 and all the IDU's shall shut down and all fire/smoke dampers (in the Basement and those located in plane of the Ground Floor) will close. AHU-2 and its associated return fan will also shut off. Duct detectors and fire alarm relays will be furnished under Division 26. Duct detectors shall be installed under Division 23.

"Shut down" wiring from the fire alarm relays to air handler VFDs shall be furnished by the EMS contractor. "Shut down" wiring from the fire alarm relays to IDU's is high voltage and shall be provided under Division 26.

Off-Hours Operation

If off-hours operation is required in the Mercer-Basement side, AH/B-1 through AH/B-4, associated exhaust fans, and the hot and chilled central water plant will start as a system.

If off-hours operation is required in the Brix-Basement side, AH/B-5, IDU fan coils, the hot and chilled water central plant, and associated exhaust fans will operate as a system.

IDU/B-19, serving the I.T. Room, may start at any time.

Freeze Protection

If the supply air temperature of any handler drops to 45 degrees, this will indicate a failure in the control system valves, dampers, or hot water supply. If this occurs the air handler shall shut down and the EMS will issue an alarm.

VAV AIR HANDLERS (AH/B-1, B-3 & B-4)

Temperature Control

The supply-air set point temperature shall be maintained to satisfy the zone requiring the most cooling. The mixed air low limit shall be set at 45 degrees.

UNITS WITH BUILT-UP ECONOMIZERS (AH/B-1, B-2, B-3 & B-4)

Field-furnished economizer dampers and controls on air handlers must comply with the 2019 California Energy Code, Subchapter 3, Section 120.2 (i), with respect to function and economizer Fault Detection and Diagnostics.

Any fault shall be summarized as a digital output point and reported to the EMS which will issue an alarm. The EMS operator may access the system for further information.

Airflow Monitoring

Airflow monitoring of Outdoor Air is required to ensure minimum airflow when the supply fan reduces volume.

Relief Fan Control

When AH/B-1 goes into the economizer mode, relief fan EF-4 will start and modulate to offset outdoor air quantities caused by economizer operation.

When AH/B-2 goes into the economizer mode, relief fan EF-12 will start and modulate to offset outdoor air quantities caused by economizer operation.

When AH/B-4 goes into the economizer mode, relief fan EF-10 will start and modulate to offset outdoor air quantities caused by economizer operation. If more relief is required, then EF-11 will start and modulate.

Relief fans shall react slowly. The unit EMS controller measures the difference in building and outside air static pressure and modulates the fan VFD to maintain a pressure of 0.05" w.c.

Relief and/or exhaust fans operating in conjunction with an air conditioning system shall shut down when the supply fan stops. Three-phase relief fans shall have the "enable" hard wired through an auxiliary contact of the supply fan VFD. This is required.

AIRFLOW AND VENTILATION REDUCTION

The Meeting Room and Activities Room have occupancy sensors CO2 sensors to reduce the supply air and ventilation air if the room is not occupied. If occupancy is not detected for 30 minutes, the supply fan speed shall reduce speed as listed below. Minimum Outside Air is a function of CO2 sensor reading. As CO2 levels increase beyond 1000 ppm, the O.A. damper will open to the value listed in the Air Handler Schedule.

Zone	Air Handler	Min. Supply Air	Min. O.A. CFM
Meeting Room	AH/B-1	1200	600
Activities Room	AH/B-2	900	300

APPROVED
03/17/2023
COUNTY OF FRESNO
DEVELOPMENT SERVICES

When occupied, supply airflow of AH/B-1 is determined by the VAV terminals. When the Activities Room is occupied, the supply airflow of AH/B-2 shall start at 60% of full airflow, and then increase as required by the cooling load.

EMS CONTROL OF NON-HVAC SYSTEMS

There are no additional interfaces with building systems.

THE COUNTY OF FRESNO 1856

LICENSED ARCHITECT JUSTIN DOUGLAS MURATORE NO. C36020 RENEWAL: 8/23 STATE OF CALIFORNIA

MURATORE ASSOCIATES
1222 W SHAW AVE. FRESNO, CA 93711
559-565-6654
info@muratoreassociates.com

CONSULTANT STAMP

REGISTERED PROFESSIONAL ENGINEER MICHAEL D. CASEY LAWRENCE M22988 REN. 9-30-2023 MECHANICAL STATE OF CALIFORNIA

LAWRENCE ENGINEERING GROUP
7084 N. Maple Ave., Suite 101 (559) 431-0101
21003
Fresno, CA 93720 FAX (559) 431-1362

APPROVED
AUG 29 2024
FRESNO FIRE DEPARTMENT

REVISION TABLE:

REV.	DESCRIPTION	DATE

DATE: 11/15/2022
SCALE: As indicated
JOB NUMBER:

ADDRESS:

BRIX & MERCER BLDGS
1221 FULTON ST
FRESNO, CA 93721

AHJ #: 21-1137 21-105379

PROJECT:

FRESNO COUNTY DEPT. OF PUBLIC HEALTH BASEMENT RENOVATION

SHEET TITLE:

CONTROL DIAGRAMS

SHEET NUMBER

M-10

FILE PATH:

INTERNAL NUMBER: 829

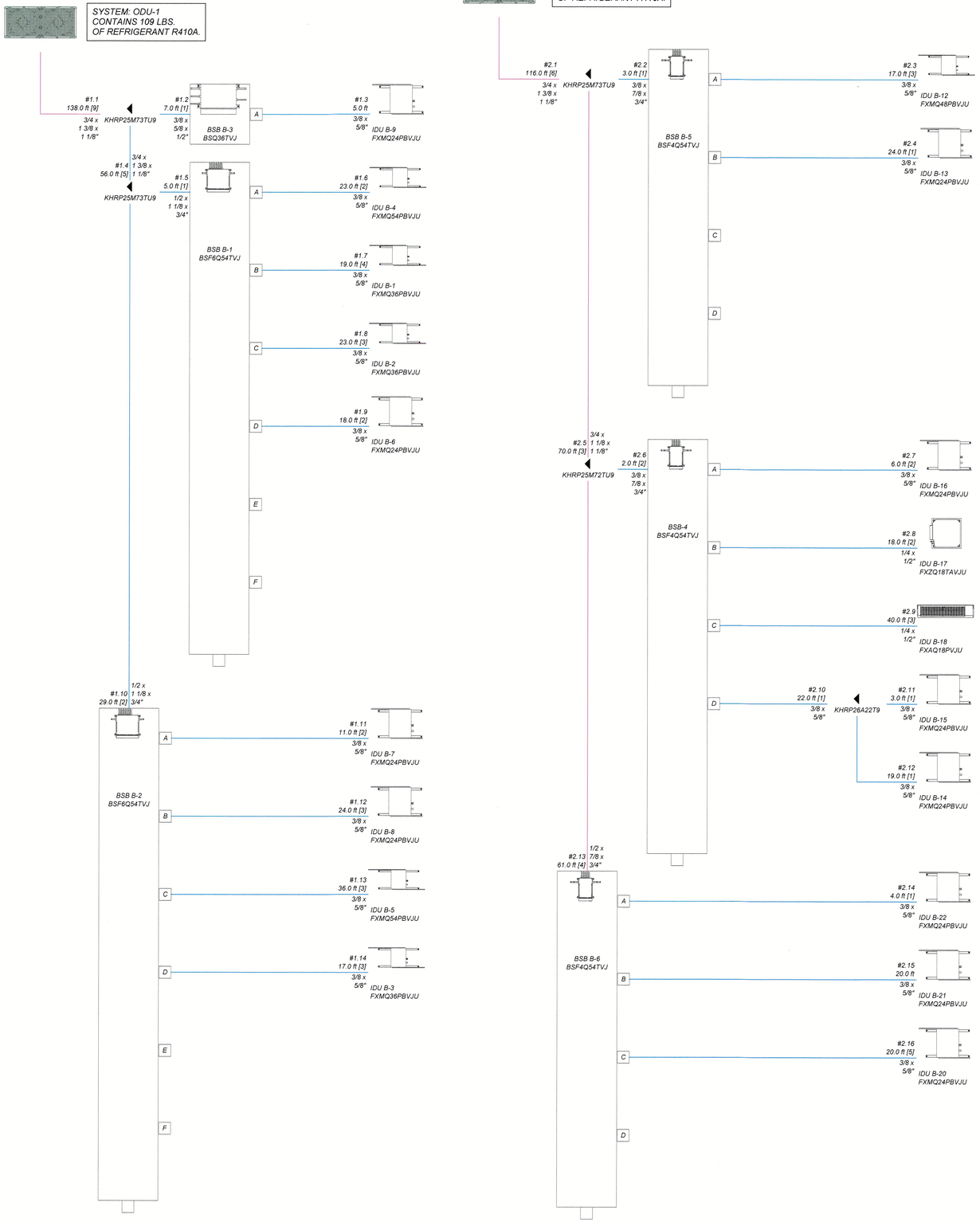

ODU-1 PIPING

DIAGRAMATIC

ODU-2 PIPING

DIAGRAMATIC

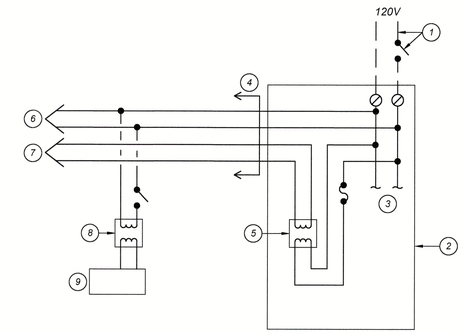

EMS CONTROLLER POWER

DIAGRAMATIC

A
M-11.1

KEYNOTES: (THIS SHEET ONLY)

1. Wiring, conduit, and disconnect switch by Electrical.
2. EMS controller cabinet with controls and devices as required. Refer to plans for location.
3. Wiring within panel to devices.
4. Wiring (120v and 24v), conduit, and disconnects from panel to controllers shall be provided by EMS Contractor.
5. Control transformer within cabinet. 24-volt power to remote controllers may be provided by a central transformer or a transformer at each device.
6. 120-volt wiring and conduit, if required.
7. 24-volt wiring. See Specifications where conduit is required.
8. Local transformer, if required.
9. EMS controller. Refer to Detail A-M11.2.

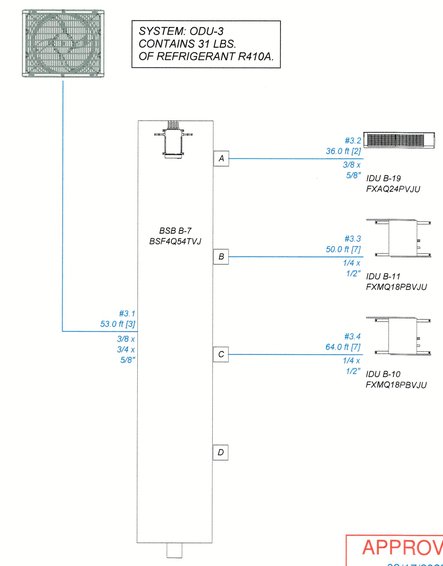

APPROVED
03/17/2023
COUNTY OF FRESNO
DEVELOPMENT SERVICES

ODU-3 PIPING

DIAGRAMATIC

FILE PATH:

THE COUNTY OF FRESNO 1856

LICENSED ARCHITECT
JUSTIN DOUGLAS MURATORE
NO. C38020
RENEWAL: 8/23
STATE OF CALIFORNIA

MURATORE ASSOCIATES
1222 W SHAW AVE.
FRESNO, CA 93711
559-565-6934
info@muratoreassociates.com

CONSULTANT STAMP

REGISTERED PROFESSIONAL ENGINEER
MICHAEL D. CAMPBELL
M27588
REN. 9-30-2023
MECHANICAL
STATE OF CALIFORNIA

LAWRENCE
ENGINEERING GROUP
7084 N. Maple Ave., Suite 101
(559) 431-0101
21003
Fresno, CA 93720
FAX (559) 431-1362

APPROVED
AUG 29 2024
FRESNO FIRE DEPARTMENT

REVISION TABLE:

REV.	DESCRIPTION	DATE

DATE: 11/15/2022
SCALE: As indicated
JOB NUMBER:

ADDRESS:

BRIX & MERCER BLDGS
1221 FULTON ST
FRESNO, CA 93721

AHJ #: 21-1137 21-105379

PROJECT:

FRESNO COUNTY DEPT. OF PUBLIC HEALTH BASEMENT RENOVATION

SHEET TITLE:

VRF PIPING DIAGRAMS

SHEET NUMBER

M-11.1

INTERNAL NUMBER: 829

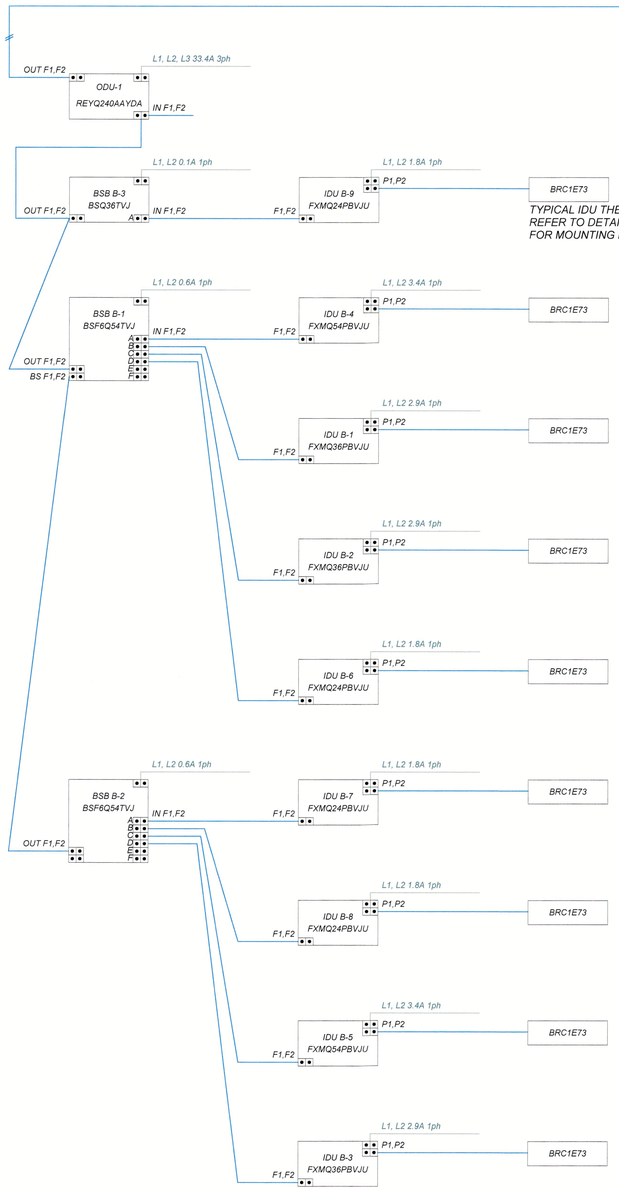

TYPICAL IDU THERMOSTAT. REFER TO DETAIL F/M4.0 FOR MOUNTING HEIGHT.

P1P2 = AWG 18-2 IS REQUIRED - HOWEVER ALWAYS, REFER TO LOCAL CODE FOR FURTHER INFORMATION.

F1F2 IN / OUT = AWG 18-2 IS REQUIRED - HOWEVER ALWAYS REFER TO LOCAL CODE FOR FUTHER INFORMATION.

ODU-1 WIRING

DIAGRAMATIC

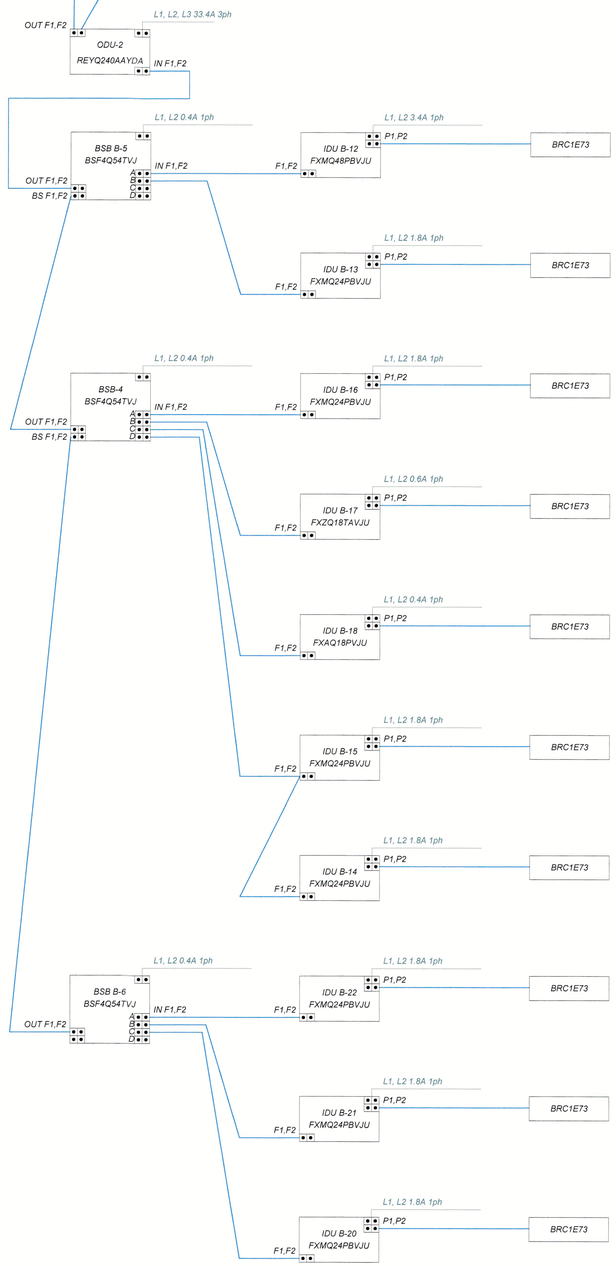

ODU-2 WIRING

DIAGRAMATIC

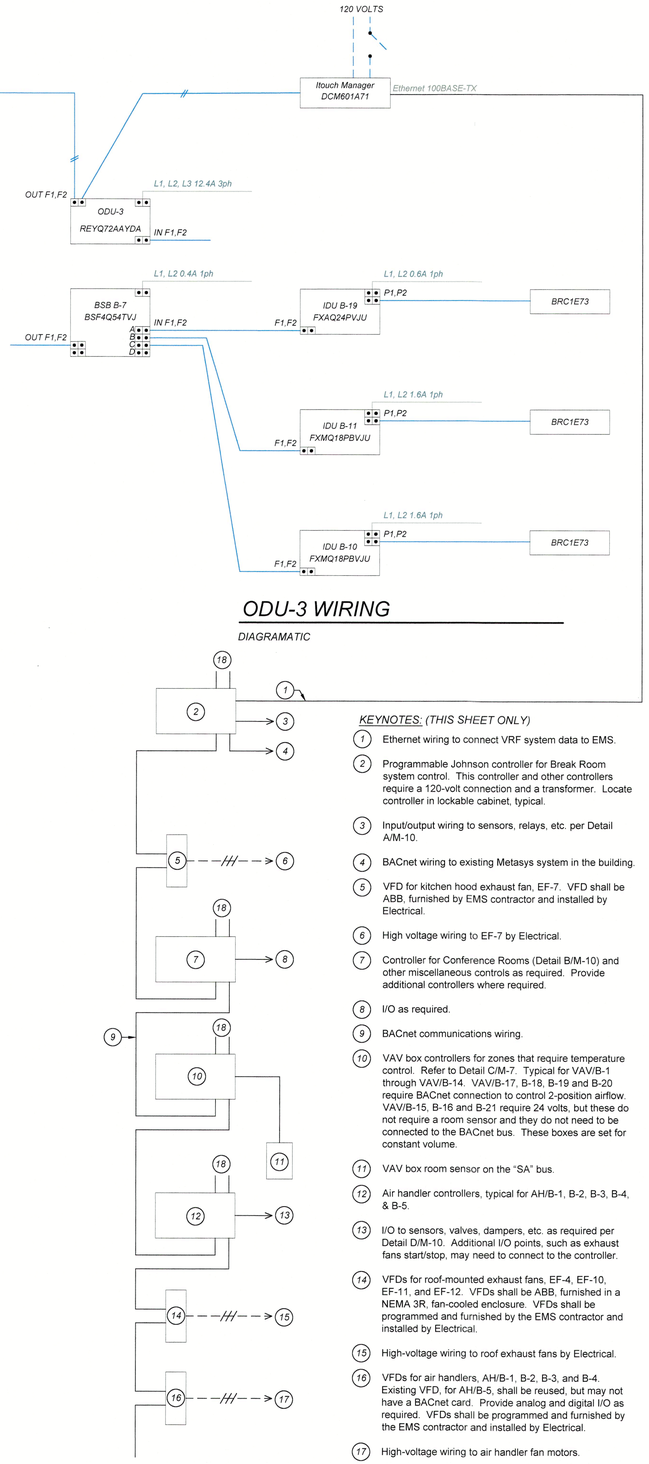

ODU-3 WIRING

DIAGRAMATIC

KEYNOTES: *(THIS SHEET ONLY)*

1. Ethernet wiring to connect VRF system data to EMS.
2. Programmable Johnson controller for Break Room system control. This controller and other controllers require a 120-volt connection and a transformer. Locate controller in lockable cabinet, typical.
3. Input/output wiring to sensors, relays, etc. per Detail A/M-10.
4. BACnet wiring to existing Metasys system in the building.
5. VFD for kitchen hood exhaust fan, EF-7. VFD shall be ABB, furnished by EMS contractor and installed by Electrical.
6. High voltage wiring to EF-7 by Electrical.
7. Controller for Conference Rooms (Detail B/M-10) and other miscellaneous controls as required. Provide additional controllers where required.
8. I/O as required.
9. BACnet communications wiring.
10. VAV box controllers for zones that require temperature control. Refer to Detail C/M-7. Typical for VAV/B-1 through VAV/B-14. VAV/B-17, B-18, B-19 and B-20 require BACnet connection to control 2-position airflow. VAV/B-15, B-16 and B-21 require 24 volts, but these do not require a room sensor and they do not need to be connected to the BACnet bus. These boxes are set for constant volume.
11. VAV box room sensor on the "SA" bus.
12. Air handler controllers, typical for AH/B-1, B-2, B-3, B-4, & B-5.
13. I/O to sensors, valves, dampers, etc. as required per Detail D/M-10. Additional I/O points, such as exhaust fans start/stop, may need to connect to the controller.
14. VFDs for roof-mounted exhaust fans, EF-4, EF-10, EF-11, and EF-12. VFDs shall be ABB, furnished in a NEMA 3R, fan-cooled enclosure. VFDs shall be programmed and furnished by the EMS contractor and installed by Electrical.
15. High-voltage wiring to roof exhaust fans by Electrical.
16. VFDs for air handlers, AH/B-1, B-2, B-3, and B-4. Existing VFD, for AH/B-5, shall be reused, but may not have a BACnet card. Provide analog and digital I/O as required. VFDs shall be programmed and furnished by the EMS contractor and installed by Electrical.
17. High-voltage wiring to air handler fan motors.
18. Refer to Detail A/M-11.2 for additional wiring.

SYSTEM ARCHITECTURE

DIAGRAMATIC

A/M-11.2

APPROVED
03/17/2023
COUNTY OF FRESNO
DEVELOPMENT SERVICES

APPROVED
AUG 29 2024
FRESNO FIRE DEPARTMENT

LICENSED ARCHITECT
JUSTIN DOUGLAS MURATORE
NO. C38020
RENEWAL: 6/23
STATE OF CALIFORNIA

MURATORE ASSOCIATES
1222 N SHAW AVE.
FRESNO, CA 93711
559-348-6634
info@muratoreassociates.com

CONSULTANT STAMP
REGISTERED PROFESSIONAL ENGINEER
THOMAS D. CHANDLER
M22588
REN. 9-30-2023
MECHANICAL
STATE OF CALIFORNIA

LAWRENCE
ENGINEERING GROUP
7084 N. Maple Ave., Suite 101
(559) 431-0101
21003
Fresno, CA 93720
FAX (559) 431-1362

REVISION TABLE:

REV.	DESCRIPTION	DATE

DATE: 11/15/2022
SCALE: As indicated
JOB NUMBER:

ADDRESS:

BRIX & MERCER BLDGS
1221 FULTON ST
FRESNO, CA 93721

AHJ #: 21-1137 21-105379

PROJECT:

FRESNO COUNTY DEPT. OF PUBLIC HEALTH BASEMENT RENOVATION

SHEET TITLE:

VRF WIRING DIAGRAMS

SHEET NUMBER

M-11.2

FILE PATH:

INTERNAL NUMBER: 829

STATE OF CALIFORNIA
Mechanical Systems
NRCC-MCH-E — CALIFORNIA ENERGY COMMISSION

CERTIFICATE OF COMPLIANCE		NRCC-MCH-E
Project Name:	Brix Mercer Basement Remodel	Report Page: (Page 2 of 34)
Project Address:	1221 Fulton Street	Date Prepared: 3/4/2022

C. COMPLIANCE RESULTS
Table C will indicate if the project data input into the compliance document is compliant with mechanical requirements. This table is not editable by the user. If this table says "DOES NOT COMPLY" or "COMPLIES with Exceptional Conditions" refer to Table D., or the table indicated as not compliant for guidance.

01		02		03		04		05		06		07		08	09
System Summary §110.1, §110.2, §140.4	AND	Pumps §140.4(k)	AND	Fans/ Economizers §140.4(c), §140.4(e)	AND	System Controls §110.2, §120.2, §140.4(f)	AND	Ventilation §120.1	AND	Terminal Box Controls §140.4(d)	AND	Distribution §120.3, §140.4(i)	AND	Cooling Towers §110.2(e)2	Compliance Results
(See Table F)		(See Table G)		(See Table H)		(See Table I)		(See Table J)		(See Table K)		(See Table L)		(See Table M)	
Yes	AND		AND	Yes	AND	Yes	AND	Yes	AND	Yes	AND	Yes	AND		COMPLIES
Mandatory Measures Compliance (See Table Q for Details)												COMPLIES			

D. EXCEPTIONAL CONDITIONS
This table is auto-filled with uneditable comments because of selections made or data entered in tables throughout the form.

E. ADDITIONAL REMARKS
This table includes remarks made by the permit applicant to the Authority Having Jurisdiction.

Registration Number: — Registration Date/Time: — Registration Provider: Energysoft

CA Building Energy Efficiency Standards - 2019 Nonresidential Compliance — Report Version: 2019.1.003 Schema Version: rev 20200601 — Report Generated: 2022-03-04 09:13:03

STATE OF CALIFORNIA
Mechanical Systems
NRCC-MCH-E — CALIFORNIA ENERGY COMMISSION

CERTIFICATE OF COMPLIANCE		NRCC-MCH-E
Project Name:	Brix Mercer Basement Remodel	Report Page: (Page 1 of 34)
Project Address:	1221 Fulton Street	Date Prepared: 3/4/2022

This document is used to demonstrate compliance for mechanical systems that are within the scope of the permit application and are demonstrating compliance using the prescriptive path outlined in §140.4, or §141.0(b)2 for alterations.

A. GENERAL INFORMATION

01	Project Location (city)	Fresno	04	Total Conditioned Floor Area	22747
02	Climate Zone	13	05	Total Unconditioned Floor Area	173
03	Occupancy Types Within Project:		06	# of Stories (Habitable Above Grade)	1
☒ Office (B)	☐ Retail (M)		☐ Non-refrigerated Warehouse (S)		
☐ Hotel/ Motel Guest Rooms (R-1)	☐ School (E)		☐ Healthcare Facility (I)		
☐ High-Rise Residential (R-2/R-3)	☐ Relocatable Class Bldg (E)		☒ Other (write in)		See Table J

B. PROJECT SCOPE
This table includes mechanical systems or components that are within the scope of the permit application and are demonstrating compliance using the prescriptive path outlined in §140.4, or §141.0(b)2 for alterations.

01 Air System(s)	02 Wet System Components	03 Dry System Components
☒ Heating Air System	☐ Water Economizer	☒ Air Economizer
☒ Cooling Air System	☐ Pumps	☐ Electric Resistance Heat
Mechanical Controls	☐ System Piping	☒ Fan Systems
☒ Mechanical Controls (existing to remain, altered or new)	☐ Cooling Towers	☒ Ductwork (existing to remain, altered or new)
	☐ Chillers	☒ Ventilation
	☐ Boilers	☒ Zonal Systems/ Terminal Boxes

Registration Number: — Registration Date/Time: — Registration Provider: Energysoft

CA Building Energy Efficiency Standards - 2019 Nonresidential Compliance — Report Version: 2019.1.003 Schema Version: rev 20200601 — Report Generated: 2022-03-04 09:13:03

BUILDING ENERGY ANALYSIS REPORT

PROJECT:
Brix Mercer Basement Remodel
1221 Fulton Street
Fresno , CA 93721

Project Designer:
Muratore Associates
2697 W Robinwood LN
Fresno , CA 93711
559-365-8543

Report Prepared by:
Abel Lopez
Lawrence Engineering Group
7084 N Maple Avenue Suite 101
Fresno, CA 93720
559-431-0101

Job Number:
21003

Date:
3/4/2022

The EnergyPro computer program has been used to perform the calculations summarized in this compliance report. This program has approved and is authorized by the California Energy Commission for use with both the Residential and Nonresidential 2019 Building Energy Efficiency Standards.

This program developed by EnergySoft Software – www.energysoft.com.

STATE OF CALIFORNIA
Mechanical Systems
NRCC-MCH-E — CALIFORNIA ENERGY COMMISSION

CERTIFICATE OF COMPLIANCE		NRCC-MCH-E
Project Name:	Brix Mercer Basement Remodel	Report Page: (Page 5 of 34)
Project Address:	1221 Fulton Street	Date Prepared: 3/4/2022

H. FAN SYSTEMS & AIR ECONOMIZERS
This table is used to demonstrate compliance with prescriptive requirements found in §140.4(c), §140.4(e) and §140.4(m) for fan systems. Fan systems serving only process loads are exempt from these requirements and do not need to be included in Table H.

System Name:	AH - B1	Economizer:[3]	Differential Temperature	Economizer Controls:	Designed per §140.4(e) and (m)	System Fan Type:	Variable Air Volume
01	02	03	04	05	06	07	08
Fan Name or Item Tag	Fan Function	Qty	Maximum Design Supply Airflow (CFM)	HP Unit[2]	Design HP	Fan Power Pressure Drop Adjustment - Table 140.4-B Device	Design Airflow through Device (CFM)
SF	Supply	1	4200	BHP	3.5		
Total System Design Supply Airflow (CFM):			4200	Total System Design (B)HP:	3.5	Maximum System Fan Power (B)HP:	

System Name:	AH - B2	Economizer:[3]	Differential Temperature	Economizer Controls:	Designed per §140.4(e) and (m)	System Fan Type:	Variable Air Volume
01	02	03	04	05	06	07	08
Fan Name or Item Tag	Fan Function	Qty	Maximum Design Supply Airflow (CFM)	HP Unit[2]	Design HP	Fan Power Pressure Drop Adjustment - Table 140.4-B Device	Design Airflow through Device (CFM)
SF	Supply	1	3300	BHP	2.5		
EF	Exhaust	1	0	BHP	0.4		
Total System Design Supply Airflow (CFM):			3300	Total System Design (B)HP:	2.9	Maximum System Fan Power (B)HP:	

Registration Number: — Registration Date/Time: — Registration Provider: Energysoft

CA Building Energy Efficiency Standards - 2019 Nonresidential Compliance — Report Version: 2019.1.003 Schema Version: rev 20200601 — Report Generated: 2022-03-04 09:13:03

STATE OF CALIFORNIA
Mechanical Systems
NRCC-MCH-E — CALIFORNIA ENERGY COMMISSION

CERTIFICATE OF COMPLIANCE		NRCC-MCH-E
Project Name:	Brix Mercer Basement Remodel	Report Page: (Page 4 of 34)
Project Address:	1221 Fulton Street	Date Prepared: 3/4/2022

F. HVAC SYSTEM SUMMARY (DRY & WET SYSTEMS)
Dry System Equipment Efficiency (other than Package Terminal Air Conditioners (PTAC) and Package Terminal Heat Pumps (PTHP))

01	02	03	04	05	06	07	08	09
		Heating Mode				Cooling Mode		
Name or Item Tag	Size Category (Btu/h)	Rating Condition (°F)	Efficiency Unit	Minimum Efficiency Required per Tables 110.2 / Title 20	Design Efficiency	Efficiency Unit	Minimum Efficiency Required per Tables 110.2 / Title 20	Design Efficiency
AH -B5	>=240,000					EER IEER	9.8 11.4	12.2 12.9
VRF ODU 1	>=240,000	47 °Fdb/ 43 °Fwb OSA	COP	3.2	4	EER IEER	9.5 12.7	13 18
ODU 2	>=240,000	47 °Fdb/ 43 °Fwb OSA	COP	3.2	4	EER IEER	9.5 12.7	13 18
ODU 3	>=65,000 and <135,000	47 °Fdb/ 43 °Fwb OSA	COP	3.3	4.5	EER IEER	11.0 14.6	13.9 21.3

G. PUMPS
This section does not apply to this project.

Registration Number: — Registration Date/Time: — Registration Provider: Energysoft

CA Building Energy Efficiency Standards - 2019 Nonresidential Compliance — Report Version: 2019.1.003 Schema Version: rev 20200601 — Report Generated: 2022-03-04 09:13:03

STATE OF CALIFORNIA
Mechanical Systems
NRCC-MCH-E — CALIFORNIA ENERGY COMMISSION

CERTIFICATE OF COMPLIANCE		NRCC-MCH-E
Project Name:	Brix Mercer Basement Remodel	Report Page: (Page 3 of 34)
Project Address:	1221 Fulton Street	Date Prepared: 3/4/2022

F. HVAC SYSTEM SUMMARY (DRY & WET SYSTEMS)
This table is used to demonstrate compliance for mechanical equipment with mandatory requirements found in §110.1 and §110.2(a) and prescriptive requirements found in §140.4(a), §140.4(b) and §140.4(k) or §141.0(b)2 for alterations.

Dry System Equipment Sizing (includes air conditioners, condensers, heat pumps, VRF, furnaces and unit heaters)

01	02	03	04	05	06	07	08	09	10	11
					Equipment Sizing per Mechanical Schedule (kBtu/h) §140.4 (a&b)					
					Heating Output[2,3]			Cooling Output[2,3]	Load Calculations[3,4]	
Name or Item Tag	Equipment Category per Tables 110.2	Equipment Type per Tables 110.2 / Title 20	Smallest Size Available[1] §140.4(a)		Per Design (kBtu/h)	Rated (kBtu/h)	Supp. Heating Output (kBtu/h)	Sensible Per Design (kBtu/h)	Rated (kBtu/h)	Total Heating Load (kBtu/h)	Total Sensible Cooling Load (kBtu/h)
AH -B5	Unitary AC/ Condensers	AC, air-cooled pkg (3 phase)	NA: Load Controls		401.9	401.9	0	330.24	321.5	865.17	415.74
VRF ODU 1	Variable Refrigerant Flow	VRF heat pump, air cooled	NA: Load Controls		199.65	228	0	250.21	200	319.77	263.01
ODU 2	Variable Refrigerant Flow	VRF heat pump, air cooled	NA: Load Controls		199.65	228	0	243.3	200	200.54	245.37
ODU 3	Variable Refrigerant Flow	VRF heat pump, air cooled	NA: Load Controls		67.43	77	0	62.58	60	60.28	65.23

[1] FOOTNOTES: Equipment shall be the smallest size, within the available options of the desired equipment line, necessary to meet the design heating and cooling loads of the building per §140.4(a). Healthcare facilities are excepted.
[2] It is common practice to show rated output capacity on the equipment schedule. Sensible cooling output comes from specification sheet tables.
[3] If equipment is heating only, leave cooling output and load blank. If equipment is cooling only, leave heating output and load blank.
[4] Authority Having Jurisdiction may ask for load calculations used for compliance per §140.4(b).

Registration Number: — Registration Date/Time: — Registration Provider: Energysoft

CA Building Energy Efficiency Standards - 2019 Nonresidential Compliance — Report Version: 2019.1.003 Schema Version: rev 20200601 — Report Generated: 2022-03-04 09:13:03

STATE OF CALIFORNIA
Mechanical Systems
NRCC-MCH-E — CALIFORNIA ENERGY COMMISSION

CERTIFICATE OF COMPLIANCE		NRCC-MCH-E
Project Name:	Brix Mercer Basement Remodel	Report Page: (Page 8 of 34)
Project Address:	1221 Fulton Street	Date Prepared: 3/4/2022

H. FAN SYSTEMS & AIR ECONOMIZERS

System Name:	IDU B - 4,5 (4.5 ton)	Economizer:[3]	NA: <=54 kBtu/h cooling	Economizer Controls:	Designed per §140.4(e) and (m)	System Fan Type:	Constant Volume
01	02	03	04	05	06	07	08
Fan Name or Item Tag	Fan Function	Qty	Maximum Design Supply Airflow (CFM)	HP Unit[2]	Design HP	Fan Power Pressure Drop Adjustment - Table 140.4-B Device	Design Airflow through Device (CFM)
VRF	Other (Transfer, VAV box)	1	1350	BHP	0.4		
Total System Design Supply Airflow (CFM):			1350	Total System Design (B)HP:	0.4	Maximum System Fan Power (B)HP:	

System Name:	IDU B - 4,5 (4.5 ton)	Economizer:[3]	NA: <=54 kBtu/h cooling	Economizer Controls:	Designed per §140.4(e) and (m)	System Fan Type:	Constant Volume
01	02	03	04	05	06	07	08
Fan Name or Item Tag	Fan Function	Qty	Maximum Design Supply Airflow (CFM)	HP Unit[2]	Design HP	Fan Power Pressure Drop Adjustment - Table 140.4-B Device	Design Airflow through Device (CFM)
VRF	Other (Transfer, VAV box)	1	1350	BHP	0.4		
Total System Design Supply Airflow (CFM):			1350	Total System Design (B)HP:	0.4	Maximum System Fan Power (B)HP:	

System Name:	IDU B - 6,7,8,9,13,14,15,16 (2 ton)	Economizer:[3]	NA: <=54 kBtu/h cooling	Economizer Controls:	Designed per §140.4(e) and (m)	System Fan Type:	Constant Volume
01	02	03	04	05	06	07	08
Fan Name or Item Tag	Fan Function	Qty	Maximum Design Supply Airflow (CFM)	HP Unit[2]	Design HP	Fan Power Pressure Drop Adjustment - Table 140.4-B Device	Design Airflow through Device (CFM)
VRF	Other (Transfer, VAV box)	1	650	BHP	0.1		
Total System Design Supply Airflow (CFM):			650	Total System Design (B)HP:	0.1	Maximum System Fan Power (B)HP:	

Registration Number: — Registration Date/Time: — Registration Provider: Energysoft

CA Building Energy Efficiency Standards - 2019 Nonresidential Compliance — Report Version: 2019.1.003 Schema Version: rev 20200601 — Report Generated: 2022-03-04 09:13:03

STATE OF CALIFORNIA
Mechanical Systems
NRCC-MCH-E — CALIFORNIA ENERGY COMMISSION

CERTIFICATE OF COMPLIANCE		NRCC-MCH-E
Project Name:	Brix Mercer Basement Remodel	Report Page: (Page 7 of 34)
Project Address:	1221 Fulton Street	Date Prepared: 3/4/2022

H. FAN SYSTEMS & AIR ECONOMIZERS

System Name:	IDU B - 1,2,3 (3 ton)	Economizer:[3]	NA: <=54 kBtu/h cooling	Economizer Controls:	Designed per §140.4(e) and (m)	System Fan Type:	Constant Volume
01	02	03	04	05	06	07	08
Fan Name or Item Tag	Fan Function	Qty	Maximum Design Supply Airflow (CFM)	HP Unit[2]	Design HP	Fan Power Pressure Drop Adjustment - Table 140.4-B Device	Design Airflow through Device (CFM)
VRF	Other (Transfer, VAV box)	1	1100	BHP	0.3		
Total System Design Supply Airflow (CFM):			1100	Total System Design (B)HP:	0.3	Maximum System Fan Power (B)HP:	

System Name:	IDU B - 1,2,3 (3 ton)	Economizer:[3]	NA: <=54 kBtu/h cooling	Economizer Controls:	Designed per §140.4(e) and (m)	System Fan Type:	Constant Volume
01	02	03	04	05	06	07	08
Fan Name or Item Tag	Fan Function	Qty	Maximum Design Supply Airflow (CFM)	HP Unit[2]	Design HP	Fan Power Pressure Drop Adjustment - Table 140.4-B Device	Design Airflow through Device (CFM)
VRF	Other (Transfer, VAV box)	1	1100	BHP	0.3		
Total System Design Supply Airflow (CFM):			1100	Total System Design (B)HP:	0.3	Maximum System Fan Power (B)HP:	

System Name:	IDU B - 1,2,3 (3 ton)	Economizer:[3]	NA: <=54 kBtu/h cooling	Economizer Controls:	Designed per §140.4(e) and (m)	System Fan Type:	Constant Volume
01	02	03	04	05	06	07	08
Fan Name or Item Tag	Fan Function	Qty	Maximum Design Supply Airflow (CFM)	HP Unit[2]	Design HP	Fan Power Pressure Drop Adjustment - Table 140.4-B Device	Design Airflow through Device (CFM)
VRF	Other (Transfer, VAV box)	1	1100	BHP	0.3		
Total System Design Supply Airflow (CFM):			1100	Total System Design (B)HP:	0.3	Maximum System Fan Power (B)HP:	

Registration Number: — Registration Date/Time: — Registration Provider: Energysoft

CA Building Energy Efficiency Standards - 2019 Nonresidential Compliance — Report Version: 2019.1.003 Schema Version: rev 20200601 — Report Generated: 2022-03-04 09:13:03

STATE OF CALIFORNIA
Mechanical Systems
NRCC-MCH-E — CALIFORNIA ENERGY COMMISSION

CERTIFICATE OF COMPLIANCE		NRCC-MCH-E
Project Name:	Brix Mercer Basement Remodel	Report Page: (Page 6 of 34)
Project Address:	1221 Fulton Street	Date Prepared: 3/4/2022

H. FAN SYSTEMS & AIR ECONOMIZERS

System Name:	AH - B3	Economizer:[3]	Differential Temperature	Economizer Controls:	Designed per §140.4(e) and (m)	System Fan Type:	Variable Air Volume
01	02	03	04	05	06	07	08
Fan Name or Item Tag	Fan Function	Qty	Maximum Design Supply Airflow (CFM)	HP Unit[2]	Design HP	Fan Power Pressure Drop Adjustment - Table 140.4-B Device	Design Airflow through Device (CFM)
SF	Supply	1	1600	BHP	1.2		
Total System Design Supply Airflow (CFM):			1600	Total System Design (B)HP:	1.2	Maximum System Fan Power (B)HP:	

System Name:	AH - B4	Economizer:[3]	Differential Temperature	Economizer Controls:	Designed per §140.4(e) and (m)	System Fan Type:	Variable Air Volume
01	02	03	04	05	06	07	08
Fan Name or Item Tag	Fan Function	Qty	Maximum Design Supply Airflow (CFM)	HP Unit[2]	Design HP	Fan Power Pressure Drop Adjustment - Table 140.4-B Device	Design Airflow through Device (CFM)
SF	Supply	1	3150	BHP	2.3		
EF	Exhaust	1	0	BHP	0.1		
Total System Design Supply Airflow (CFM):			3150	Total System Design (B)HP:	2.4	Maximum System Fan Power (B)HP:	

System Name:	AH -B5	Economizer:[3]	NA: System operates @ 100% OSA	Economizer Controls:	Designed per §140.4(e) and (m)	System Fan Type:	Constant Volume
01	02	03	04	05	06	07	08
Fan Name or Item Tag	Fan Function	Qty	Maximum Design Supply Airflow (CFM)	HP Unit[2]	Design HP	Fan Power Pressure Drop Adjustment - Table 140.4-B Device	Design Airflow through Device (CFM)
SF	Supply	1	7000	BHP	6		
Total System Design Supply Airflow (CFM):			7000	Total System Design (B)HP:	6	Maximum System Fan Power (B)HP:	6.58

Registration Number: — Registration Date/Time: — Registration Provider: Energysoft

CA Building Energy Efficiency Standards - 2019 Nonresidential Compliance — Report Version: 2019.1.003 Schema Version: rev 20200601 — Report Generated: 2022-03-04 09:13:03

APPROVED
03/17/2023
COUNTY OF FRESNO
DEVELOPMENT SERVICES

THE COUNTY OF FRESNO 1856

LICENSED ARCHITECT JUSTIN DOUGLAS MURATORE NO. C38020 RENEWAL: 8/23 STATE OF CALIFORNIA

MURATORE ASSOCIATES
1222 W SHAW AVE FRESNO, CA 93711 — 559-365-8543 — info@muratoreassociates.com

CONSULTANT STAMP

REGISTERED PROFESSIONAL ENGINEER DARRELL D. GARDNER M23588 REN. 9-30-2023 MECHANICAL STATE OF CALIFORNIA

LAWRENCE ENGINEERING GROUP
7084 N. Maple Ave., Suite 101 (559) 431-0101 — 21003 — Fresno, CA 93720 FAX (559) 431-1362

APPROVED
AUG 29 2024
FRESNO FIRE DEPARTMENT

REVISION TABLE:

REV.	DESCRIPTION	DATE

DATE: 11/15/2022
SCALE: As indicated
JOB NUMBER:

ADDRESS:
BRIX & MERCER BLDGS
1221 FULTON ST
FRESNO, CA 93721

AHJ #: 21-1137 21-105379

PROJECT:
FRESNO COUNTY DEPT. OF PUBLIC HEALTH BASEMENT RENOVATION

SHEET TITLE:
TITLE 24 DOCUMENTS

SHEET NUMBER
M-12.1

FILE PATH:

INTERNAL NUMBER: 820

STATE OF CALIFORNIA
Mechanical Systems
NRCC-MCH-E — CALIFORNIA ENERGY COMMISSION

CERTIFICATE OF COMPLIANCE		NRCC-MCH-E
Project Name:	Brix Mercer Basement Remodel	Report Page: (Page 11 of 34)
Project Address:	1221 Fulton Street	Date Prepared: 3/4/2022

H. FAN SYSTEMS & AIR ECONOMIZERS

System Name:	IDU B - 20,23 (HSW .75 ton, 275 CFM)	Economizer:[1]	NA: <=54 kBtu/h cooling	Economizer Controls:	Designed per §140.4(e) and (m)	System Fan Type:	Constant Volume
01	02	03	04	05	06	07	08
Fan Name or Item Tag	Fan Function	Qty	Maximum Design Supply Airflow (CFM)	HP Unit[2]	Design HP	Fan Power Pressure Drop Adjustment - Table 140.4-B	
						Device	Design Airflow through Device (CFM)
VRF	Other (Transfer, VAV box)	1	275	BHP	0.1		
Total System Design Supply Airflow (CFM):			275	Total System Design (B)HP:	0.1	Maximum System Fan Power (B)HP:	

System Name:	IDU B - 12 (4 ton)	Economizer:[1]	NA: <=54 kBtu/h cooling	Economizer Controls:	Designed per §140.4(e) and (m)	System Fan Type:	Constant Volume
01	02	03	04	05	06	07	08
Fan Name or Item Tag	Fan Function	Qty	Maximum Design Supply Airflow (CFM)	HP Unit[2]	Design HP	Fan Power Pressure Drop Adjustment - Table 140.4-B	
						Device	Design Airflow through Device (CFM)
VRF	Other (Transfer, VAV box)	1	1350	BHP	0.3		
Total System Design Supply Airflow (CFM):			1350	Total System Design (B)HP:	0.3	Maximum System Fan Power (B)HP:	

Registration Number: — Registration Date/Time: — Registration Provider: Energysoft

CA Building Energy Efficiency Standards - 2019 Nonresidential Compliance — Report Version: 2019.1.003 Schema Version: rev 20200601 — Report Generated: 2022-03-04 09:13:03

STATE OF CALIFORNIA
Mechanical Systems
NRCC-MCH-E — CALIFORNIA ENERGY COMMISSION

CERTIFICATE OF COMPLIANCE		NRCC-MCH-E
Project Name:	Brix Mercer Basement Remodel	Report Page: (Page 10 of 34)
Project Address:	1221 Fulton Street	Date Prepared: 3/4/2022

H. FAN SYSTEMS & AIR ECONOMIZERS

System Name:	IDU B - 6,7,8,9,13,14,15,16 (2 ton)	Economizer:[1]	NA: <=54 kBtu/h cooling	Economizer Controls:	Designed per §140.4(e) and (m)	System Fan Type:	Constant Volume
01	02	03	04	05	06	07	08
Fan Name or Item Tag	Fan Function	Qty	Maximum Design Supply Airflow (CFM)	HP Unit[2]	Design HP	Fan Power Pressure Drop Adjustment - Table 140.4-B	
						Device	Design Airflow through Device (CFM)
VRF	Other (Transfer, VAV box)	1	650	BHP	0.1		
Total System Design Supply Airflow (CFM):			650	Total System Design (B)HP:	0.1	Maximum System Fan Power (B)HP:	

System Name:	IDU B - 17(cc 1.5 ton)	Economizer:[1]	NA: <=54 kBtu/h cooling	Economizer Controls:	Designed per §140.4(e) and (m)	System Fan Type:	Constant Volume
01	02	03	04	05	06	07	08
Fan Name or Item Tag	Fan Function	Qty	Maximum Design Supply Airflow (CFM)	HP Unit[2]	Design HP	Fan Power Pressure Drop Adjustment - Table 140.4-B	
						Device	Design Airflow through Device (CFM)
VRF	Other (Transfer, VAV box)	1	350	BHP	0.1		
EF	Exhaust	1	0	BHP	2		
Total System Design Supply Airflow (CFM):			350	Total System Design (B)HP:	2.1	Maximum System Fan Power (B)HP:	

System Name:	IDU B - 18 (HSW 1.5 ton)	Economizer:[1]	NA: <=54 kBtu/h cooling	Economizer Controls:	Designed per §140.4(e) and (m)	System Fan Type:	Constant Volume
01	02	03	04	05	06	07	08
Fan Name or Item Tag	Fan Function	Qty	Maximum Design Supply Airflow (CFM)	HP Unit[2]	Design HP	Fan Power Pressure Drop Adjustment - Table 140.4-B	
						Device	Design Airflow through Device (CFM)
VRF	Other (Transfer, VAV box)	1	400	BHP	0.1		
Total System Design Supply Airflow (CFM):			400	Total System Design (B)HP:	0.1	Maximum System Fan Power (B)HP:	

Registration Number: — Registration Date/Time: — Registration Provider: Energysoft

CA Building Energy Efficiency Standards - 2019 Nonresidential Compliance — Report Version: 2019.1.003 Schema Version: rev 20200601 — Report Generated: 2022-03-04 09:13:03

STATE OF CALIFORNIA
Mechanical Systems
NRCC-MCH-E — CALIFORNIA ENERGY COMMISSION

CERTIFICATE OF COMPLIANCE		NRCC-MCH-E
Project Name:	Brix Mercer Basement Remodel	Report Page: (Page 9 of 34)
Project Address:	1221 Fulton Street	Date Prepared: 3/4/2022

H. FAN SYSTEMS & AIR ECONOMIZERS

System Name:	IDU B - 6,7,8,9,13,14,15,16 (2 ton)	Economizer:[1]	NA: <=54 kBtu/h cooling	Economizer Controls:	Designed per §140.4(e) and (m)	System Fan Type:	Constant Volume
01	02	03	04	05	06	07	08
Fan Name or Item Tag	Fan Function	Qty	Maximum Design Supply Airflow (CFM)	HP Unit[2]	Design HP	Fan Power Pressure Drop Adjustment - Table 140.4-B	
						Device	Design Airflow through Device (CFM)
VRF	Other (Transfer, VAV box)	1	650	BHP	0.1		
Total System Design Supply Airflow (CFM):			650	Total System Design (B)HP:	0.1	Maximum System Fan Power (B)HP:	

System Name:	IDU B - 6,7,8,9,13,14,15,16 (2 ton)	Economizer:[1]	NA: <=54 kBtu/h cooling	Economizer Controls:	Designed per §140.4(e) and (m)	System Fan Type:	Constant Volume
01	02	03	04	05	06	07	08
Fan Name or Item Tag	Fan Function	Qty	Maximum Design Supply Airflow (CFM)	HP Unit[2]	Design HP	Fan Power Pressure Drop Adjustment - Table 140.4-B	
						Device	Design Airflow through Device (CFM)
VRF	Other (Transfer, VAV box)	1	650	BHP	0.1		
Total System Design Supply Airflow (CFM):			650	Total System Design (B)HP:	0.1	Maximum System Fan Power (B)HP:	

Registration Number: — Registration Date/Time: — Registration Provider: Energysoft

CA Building Energy Efficiency Standards - 2019 Nonresidential Compliance — Report Version: 2019.1.003 Schema Version: rev 20200601 — Report Generated: 2022-03-04 09:13:03

STATE OF CALIFORNIA
Mechanical Systems
NRCC-MCH-E — CALIFORNIA ENERGY COMMISSION

CERTIFICATE OF COMPLIANCE		NRCC-MCH-E
Project Name:	Brix Mercer Basement Remodel	Report Page: (Page 14 of 34)
Project Address:	1221 Fulton Street	Date Prepared: 3/4/2022

H. FAN SYSTEMS & AIR ECONOMIZERS

System Name:	IDU B - 20,23 (HSW .75 ton, 275 CFM)	Economizer:[1]	NA: <=54 kBtu/h cooling	Economizer Controls:	Designed per §140.4(e) and (m)	System Fan Type:	Constant Volume
01	02	03	04	05	06	07	08
Fan Name or Item Tag	Fan Function	Qty	Maximum Design Supply Airflow (CFM)	HP Unit[2]	Design HP	Fan Power Pressure Drop Adjustment - Table 140.4-B	
						Device	Design Airflow through Device (CFM)
VRF	Other (Transfer, VAV box)	1	275	BHP	0.1		
Total System Design Supply Airflow (CFM):			275	Total System Design (B)HP:	0.1	Maximum System Fan Power (B)HP:	

System Name:	IDU B-10,11(1.5 ton)	Economizer:[1]	NA: <=54 kBtu/h cooling	Economizer Controls:	Designed per §140.4(e) and (m)	System Fan Type:	Constant Volume
01	02	03	04	05	06	07	08
Fan Name or Item Tag	Fan Function	Qty	Maximum Design Supply Airflow (CFM)	HP Unit[2]	Design HP	Fan Power Pressure Drop Adjustment - Table 140.4-B	
						Device	Design Airflow through Device (CFM)
VRF	Other (Transfer, VAV box)	1	550	BHP	0.1		
Total System Design Supply Airflow (CFM):			550	Total System Design (B)HP:	0.1	Maximum System Fan Power (B)HP:	

System Name:	IDU B-10,11(1.5 ton)	Economizer:[1]	NA: <=54 kBtu/h cooling	Economizer Controls:	Designed per §140.4(e) and (m)	System Fan Type:	Constant Volume
01	02	03	04	05	06	07	08
Fan Name or Item Tag	Fan Function	Qty	Maximum Design Supply Airflow (CFM)	HP Unit[2]	Design HP	Fan Power Pressure Drop Adjustment - Table 140.4-B	
						Device	Design Airflow through Device (CFM)
VRF	Other (Transfer, VAV box)	1	550	BHP	0.1		
Total System Design Supply Airflow (CFM):			550	Total System Design (B)HP:	0.1	Maximum System Fan Power (B)HP:	

Registration Number: — Registration Date/Time: — Registration Provider: Energysoft

CA Building Energy Efficiency Standards - 2019 Nonresidential Compliance — Report Version: 2019.1.003 Schema Version: rev 20200601 — Report Generated: 2022-03-04 09:13:03

STATE OF CALIFORNIA
Mechanical Systems
NRCC-MCH-E — CALIFORNIA ENERGY COMMISSION

CERTIFICATE OF COMPLIANCE		NRCC-MCH-E
Project Name:	Brix Mercer Basement Remodel	Report Page: (Page 13 of 34)
Project Address:	1221 Fulton Street	Date Prepared: 3/4/2022

H. FAN SYSTEMS & AIR ECONOMIZERS

System Name:	IDU B - 21 (1 ton)	Economizer:[1]	NA: <=54 kBtu/h cooling	Economizer Controls:	Designed per §140.4(e) and (m)	System Fan Type:	Constant Volume
01	02	03	04	05	06	07	08
Fan Name or Item Tag	Fan Function	Qty	Maximum Design Supply Airflow (CFM)	HP Unit[2]	Design HP	Fan Power Pressure Drop Adjustment - Table 140.4-B	
						Device	Design Airflow through Device (CFM)
VRF	Other (Transfer, VAV box)	1	400	BHP	0.1		
Total System Design Supply Airflow (CFM):			400	Total System Design (B)HP:	0.1	Maximum System Fan Power (B)HP:	

System Name:	IDU B - 6,7,8,9,13,14,15,16 (2 ton)	Economizer:[1]	NA: <=54 kBtu/h cooling	Economizer Controls:	Designed per §140.4(e) and (m)	System Fan Type:	Constant Volume
01	02	03	04	05	06	07	08
Fan Name or Item Tag	Fan Function	Qty	Maximum Design Supply Airflow (CFM)	HP Unit[2]	Design HP	Fan Power Pressure Drop Adjustment - Table 140.4-B	
						Device	Design Airflow through Device (CFM)
VRF	Other (Transfer, VAV box)	1	650	BHP	0.1		
EF	Exhaust	1	0	BHP	0.1		
Total System Design Supply Airflow (CFM):			650	Total System Design (B)HP:	0.2	Maximum System Fan Power (B)HP:	

Registration Number: — Registration Date/Time: — Registration Provider: Energysoft

CA Building Energy Efficiency Standards - 2019 Nonresidential Compliance — Report Version: 2019.1.003 Schema Version: rev 20200601 — Report Generated: 2022-03-04 09:13:03

STATE OF CALIFORNIA
Mechanical Systems
NRCC-MCH-E — CALIFORNIA ENERGY COMMISSION

CERTIFICATE OF COMPLIANCE		NRCC-MCH-E
Project Name:	Brix Mercer Basement Remodel	Report Page: (Page 12 of 34)
Project Address:	1221 Fulton Street	Date Prepared: 3/4/2022

H. FAN SYSTEMS & AIR ECONOMIZERS

System Name:	IDU B - 6,7,8,9,13,14,15,16 (2 ton)	Economizer:[1]	NA: <=54 kBtu/h cooling	Economizer Controls:	Designed per §140.4(e) and (m)	System Fan Type:	Constant Volume
01	02	03	04	05	06	07	08
Fan Name or Item Tag	Fan Function	Qty	Maximum Design Supply Airflow (CFM)	HP Unit[2]	Design HP	Fan Power Pressure Drop Adjustment - Table 140.4-B	
						Device	Design Airflow through Device (CFM)
VRF	Other (Transfer, VAV box)	1	650	BHP	0.1		
EF	Exhaust	1	0	BHP	0.15		
Total System Design Supply Airflow (CFM):			650	Total System Design (B)HP:	0.25	Maximum System Fan Power (B)HP:	

System Name:	IDU B - 6,7,8,9,13,14,15,16 (2 ton)	Economizer:[1]	NA: <=54 kBtu/h cooling	Economizer Controls:	Designed per §140.4(e) and (m)	System Fan Type:	Constant Volume
01	02	03	04	05	06	07	08
Fan Name or Item Tag	Fan Function	Qty	Maximum Design Supply Airflow (CFM)	HP Unit[2]	Design HP	Fan Power Pressure Drop Adjustment - Table 140.4-B	
						Device	Design Airflow through Device (CFM)
VRF	Other (Transfer, VAV box)	3	1950	BHP	0.1		
Total System Design Supply Airflow (CFM):			1950	Total System Design (B)HP:	0.3	Maximum System Fan Power (B)HP:	

Registration Number: — Registration Date/Time: — Registration Provider: Energysoft

CA Building Energy Efficiency Standards - 2019 Nonresidential Compliance — Report Version: 2019.1.003 Schema Version: rev 20200601 — Report Generated: 2022-03-04 09:13:03

STATE OF CALIFORNIA
Mechanical Systems
NRCC-MCH-E — CALIFORNIA ENERGY COMMISSION

CERTIFICATE OF COMPLIANCE		NRCC-MCH-E
Project Name:	Brix Mercer Basement Remodel	Report Page: (Page 17 of 34)
Project Address:	1221 Fulton Street	Date Prepared: 3/4/2022

I. SYSTEM CONTROLS

ODU 3	Multi-zone w/ DDC to zone	<= 25,000 ft²	Setback	Auto Timer Switch	4 Hour Timer	EMCS	Included	Provided

[1] FOOTNOTES: Gravity gas wall heaters, gravity floor heaters, gravity room heaters, non-central electric heaters, fireplaces or decorative gas appliances, wood stoves are not required to have setback thermostats.

*Notes: Controls with a * require a note in the space below explaining how compliance is achieved. EX: system 1: SA Temp Reset: Exempt because zones compliant with §140.4(d) ; EXCEPTION 1 to §140.4(f)

J. VENTILATION AND INDOOR AIR QUALITY

This table is used to demonstrate compliance with mandatory ventilation requirements in §120.1 and §120.2(e)3iB for all nonresidential, high-rise residential and hotel/motel occupancies. For alterations, only ventilation systems being altered within the scope of the permit application need to be documented in this table. In lieu of this table, the required outdoor ventilation rates and airflows may be shown on the plans or the calculations can be presented in a spreadsheet.

01	☐	Check the box if the project is showing ventilation calculations on the plans, or attaching the calculations instead of completing this table.
02	☒	Check this box if the project included Nonresidential or Hotel/Motel spaces
	☐	Check this box if the project included new or altered high-rise residential dwelling units.
03	☐	Check the box if the project is using natural ventilation in any nonresidential or hotel/motel spaces to meet required ventilation rates per §120.1(c)2.

Nonresidential and Hotel/ Motel Ventilation Systems

04		05			06		07
System Name	AH - B1	System Design OA CFM Airflow[1]	1873		System Design Transfer Air CFM	0	Air Filtration per §120.1(c) and §141.0(b)2 [2] Provided per §120.1(c) (NR and Hotel/Motel))
08	09	10	11	12	13	14	15	16
	Mechanical Ventilation Required per §120.1(c)3 [3]				Exh. Vent per §120.1(c)4			
Space Name ot Item Tag	Occupancy Type[4]	Conditioned Floor Area (ft²)	# of Shower/ heads/ toilets	# of people[5]	Required Min OA CFM	Required Min CFM	Provided per Design CFM	DCV or Sensor Controls per §120.1(d)3, §120.1(d)5, and §120.1(e)3 [6]
Z1 Mercer 202 - Meeting Room	Conference/ meeting	3568			1784	0	0	DCV: Provided per §120.1(d)4; Occ Sensor: NA: Not required space type

Registration Number: — Registration Date/Time: — Registration Provider: Energysoft

CA Building Energy Efficiency Standards - 2019 Nonresidential Compliance — Report Version: 2019.1.003 Schema Version: rev 20200601 — Report Generated: 2022-03-04 09:13:03

STATE OF CALIFORNIA
Mechanical Systems
NRCC-MCH-E — CALIFORNIA ENERGY COMMISSION

CERTIFICATE OF COMPLIANCE		NRCC-MCH-E
Project Name:	Brix Mercer Basement Remodel	Report Page: (Page 16 of 34)
Project Address:	1221 Fulton Street	Date Prepared: 3/4/2022

I. SYSTEM CONTROLS

This table is used to demonstrate compliance with mandatory controls in §110.2 and §120.2 and prescriptive controls in §140.4(f) and (n) or requirements in §141.0(b)2E for altered space conditioning systems.

01	02	03	04	05	06	07	08	09
System Name	System Zoning	Conditioned Floor Area Being Served (ft²)	Thermostats §110.2(b) & (c)[1], §120.2(a)ac §141.0(b)2E	Shut-Off Controls §120.2(e)	Isolation Zone Controls §120.2(a)	Demand Response §110.12 and §120.2(b)	Supply Air Temp. Reset §140.4(f)	Window Interlocks per §140.4(n)
AH - B1	Single zone	<= 25,000 ft²	Setback	Auto Timer Switch	4 Hour Timer	EMCS	NA: Serves humidity sensitive process	Provided
AH - B2	Multi-zone w/ DDC to zone	<= 25,000 ft²	Setback	Auto Timer Switch	4 Hour Timer	EMCS	NA: Serves humidity sensitive process	Provided
AH - B3	Single zone	<= 25,000 ft²	Setback	Auto Timer Switch	4 Hour Timer	EMCS	NA: Serves humidity sensitive process	Provided
AH - B4	Multi-zone w/ DDC to zone	<= 25,000 ft²	Setback	Auto Timer Switch	4 Hour Timer	EMCS	NA: Serves humidity sensitive process	Provided
VRF ODU 1	Multi-zone w/ DDC to zone	<= 25,000 ft²	Setback	Auto Timer Switch	4 Hour Timer	EMCS	NA: Serves humidity sensitive process	Provided
ODU 2	Multi-zone w/ DDC to zone	<= 25,000 ft²	Setback	Auto Timer Switch	4 Hour Timer	EMCS	Included	Provided

Registration Number: — Registration Date/Time: — Registration Provider: Energysoft

CA Building Energy Efficiency Standards - 2019 Nonresidential Compliance — Report Version: 2019.1.003 Schema Version: rev 20200601 — Report Generated: 2022-03-04 09:13:03

STATE OF CALIFORNIA
Mechanical Systems
NRCC-MCH-E — CALIFORNIA ENERGY COMMISSION

CERTIFICATE OF COMPLIANCE		NRCC-MCH-E
Project Name:	Brix Mercer Basement Remodel	Report Page: (Page 15 of 34)
Project Address:	1221 Fulton Street	Date Prepared: 3/4/2022

H. FAN SYSTEMS & AIR ECONOMIZERS

System Name:	IDU B - 19 (HSW 2 ton)	Economizer:[1]	NA: <=54 kBtu/h cooling	Economizer Controls:	Designed per §140.4(e) and (m)	System Fan Type:	Constant Volume
01	02	03	04	05	06	07	08
Fan Name or Item Tag	Fan Function	Qty	Maximum Design Supply Airflow (CFM)	HP Unit[2]	Design HP	Fan Power Pressure Drop Adjustment - Table 140.4-B	
						Device	Design Airflow through Device (CFM)
VRF	Other (Transfer, VAV box)	1	625	BHP	0.1		
Total System Design Supply Airflow (CFM):			625	Total System Design (B)HP:	0.1	Maximum System Fan Power (B)HP:	

[1] FOOTNOTES: Computer room economizers must meet requirements of §140.9(e) and will be documented on the NRCC-PRC-E document.

[2] The unit used for HP must be consistent for all fans within a system.

Registration Number: — Registration Date/Time: — Registration Provider: Energysoft

CA Building Energy Efficiency Standards - 2019 Nonresidential Compliance — Report Version: 2019.1.003 Schema Version: rev 20200601 — Report Generated: 2022-03-04 09:13:03

APPROVED
03/17/2023
COUNTY OF FRESNO
DEVELOPMENT SERVICES

THE COUNTY OF FRESNO 1856

LICENSED ARCHITECT
JUSTIN DOUGLAS MURATORE
NO. C38020
RENEWAL: 8/23
STATE OF CALIFORNIA

MURATORE ASSOCIATES
1222 N SHAW AVE
FRESNO, CA 93711
559-365-6834
info@muratoreassociates.com

CONSULTANT STAMP

REGISTERED PROFESSIONAL ENGINEER
THOMAS D. CAMPBELL
M23588
REN. 9-30-2023
MECHANICAL
STATE OF CALIFORNIA

LAWRENCE ENGINEERING GROUP
7084 N. Maple Ave., Suite 101
(559) 431-0101
21003
Fresno, CA 93720
FAX (559) 431-1362

APPROVED
AUG 29 2024
FRESNO FIRE DEPARTMENT

REVISION TABLE:

REV.	DESCRIPTION	DATE

DATE: 11/15/2022
SCALE: As indicated
JOB NUMBER:

ADDRESS:
BRIX & MERCER BLDGS
1221 FULTON ST
FRESNO, CA 93721

AHJ #: 21-1137 21-105379

PROJECT:
FRESNO COUNTY DEPT. OF PUBLIC HEALTH BASEMENT RENOVATION

SHEET TITLE:
TITLE 24 DOCUMENTS

SHEET NUMBER
M-12.2

FILE PATH:

INTERNAL NUMBER: 829

STATE OF CALIFORNIA
Mechanical Systems
NRCC-MCH-E
CALIFORNIA ENERGY COMMISSION

CERTIFICATE OF COMPLIANCE		NRCC-MCH-E
Project Name:	Brix Mercer Basement Remodel	Report Page: (Page 20 of 34)
Project Address:	1221 Fulton Street	Date Prepared: 3/4/2022

J. VENTILATION AND INDOOR AIR QUALITY

17	Total System Required Min OA CFM				522	18	Ventilation for this System Complies?	Yes
04		05			06			07
System Name	VRF ODU 1	System Design OA CFM Airflow[1]		4763	System Design Transfer Air CFM		0	Air Filtration per §120.1(c) and §141.0(b)2 [2] Provided per §120.1(c) (NR and Hotel/Motel))

08	09	10	11	12	13	14	15	16	
	Mechanical Ventilation Required per §120.1(c)3 [3]					Exh. Vent per §120.1(c)4			
Space Name ot Item Tag	Occupancy Type[4]	Conditioned Floor Area (ft²)	# of Shower heads/ toilets	# of people[5]	Required Min OA CFM	Required Min CFM	Provided per Design CFM	DCV or Sensor Controls per §120.1(d)3, §120.1(d)5, and §120.1(e)3 [6]	
B1	All others	1042			156.3	0	0	DCV	NA: Not required per §120.1(d)3
								Occ Sensor	NA: Not required space type
B2	All others	1085			162.8	0	0	DCV	NA: Not required per §120.1(d)3
								Occ Sensor	NA: Not required space type
B3	All others	1096			0	0	0	DCV	NA: Not required per §120.1(d)3
								Occ Sensor	NA: Not required space type
B4 Ground Floor Lobby Southeast	Reception area	500			75	0	0	DCV	NA: Not required per §120.1(d)3
								Occ Sensor	NA: Not required space type
B5 Ground Floor Lobby Northwest	Reception area	500			75	0	0	DCV	NA: Not required per §120.1(d)3
								Occ Sensor	NA: Not required space type

Registration Number:
Registration Date/Time:
Registration Provider: Energysoft
CA Building Energy Efficiency Standards - 2019 Nonresidential Compliance
Report Version: 2019.1.003
Schema Version: rev 20200601
Report Generated: 2022-03-04 09:13:03

STATE OF CALIFORNIA
Mechanical Systems
NRCC-MCH-E
CALIFORNIA ENERGY COMMISSION

CERTIFICATE OF COMPLIANCE		NRCC-MCH-E
Project Name:	Brix Mercer Basement Remodel	Report Page: (Page 23 of 34)
Project Address:	1221 Fulton Street	Date Prepared: 3/4/2022

J. VENTILATION AND INDOOR AIR QUALITY

B20	All others	110			16.5	0	0	DCV	NA: Not required per §120.1(d)3
								Occ Sensor	NA: Not required space type
17	Total System Required Min OA CFM				1311	18	Ventilation for this System Complies?		Yes

04		05			06			07
System Name	ODU 3	System Design OA CFM Airflow[1]		898	System Design Transfer Air CFM		0	Air Filtration per §120.1(c) and §141.0(b)2 [2] Provided per §120.1(c) (NR and Hotel/Motel))

08	09	10	11	12	13	14	15	16	
	Mechanical Ventilation Required per §120.1(c)3 [3]					Exh. Vent per §120.1(c)4			
Space Name ot Item Tag	Occupancy Type[4]	Conditioned Floor Area (ft²)	# of Shower heads/ toilets	# of people[5]	Required Min OA CFM	Required Min CFM	Provided per Design CFM	DCV or Sensor Controls per §120.1(d)3, §120.1(d)5, and §120.1(e)3 [6]	
B10 B211 Conference	Conference/ meeting	435			217.5	0	0	DCV	NA: Not required per §120.1(d)3
								Occ Sensor	NA: Not required space type
B11 Conference	Conference/ meeting	448			224	0	0	DCV	NA: Not required per §120.1(d)3
								Occ Sensor	NA: Not required space type
B19	All others	197			29.6	0	0	DCV	NA: Not required per §120.1(d)3
								Occ Sensor	NA: Not required space type
17	Total System Required Min OA CFM				471	18	Ventilation for this System Complies?		Yes

[1] *FOOTNOTES: System CFM should include both mechanical and natural ventilation for the zone/system*

Registration Number:
Registration Date/Time:
Registration Provider: Energysoft
CA Building Energy Efficiency Standards - 2019 Nonresidential Compliance
Report Version: 2019.1.003
Schema Version: rev 20200601
Report Generated: 2022-03-04 09:13:03

STATE OF CALIFORNIA
Mechanical Systems
NRCC-MCH-E
CALIFORNIA ENERGY COMMISSION

CERTIFICATE OF COMPLIANCE		NRCC-MCH-E
Project Name:	Brix Mercer Basement Remodel	Report Page: (Page 26 of 34)
Project Address:	1221 Fulton Street	Date Prepared: 3/4/2022

L. DISTRIBUTION (DUCTWORK and PIPING)

		☐	In other unconditioned spaces
15		The scope of the project includes extending an existing duct system, which is constructed, insulated or sealed with asbestos.	
16		The scope of the project includes an existing duct system that is documented to have been previously sealed as confirmed through field verification and diagnostic testing in accordance with procedures in the Reference Nonresidential Appendix NA2.	
17	Yes	Duct system shall be sealed in acordance with the California Mechanical Code	

The answers to the questions below apply to the following duct systems:		AH - B3	Duct leakage testing triggered for these systems?	No
11	No	The scope of the project includes only duct systems serving healthcare facilities		
12	Yes	Duct system provides conditioned air to an occupiable space for a constant volume, single zone, space-conditioning system.		
13	Yes	The space conditioning system serves less than 5,000 ft² of conditioned floor area.		
14	No	The combined surface area of the ducts in the following locations is more than 25% of the total surface area of the entire duct system:		
		☐	Outdoors	
		☐	In a space directly under a roof that has a U-factor greater than the u-factor of the ceiling, or if the roof does not meet the requirements of §140.3(a)1B or if the roof has fixed vents or openings to the outside/ unconditioned spaces	
		☐	In an unconditioned crawl space	
		☐	In other unconditioned spaces	
15		The scope of the project includes extending an existing duct system, which is constructed, insulated or sealed with asbestos.		
16		The scope of the project includes an existing duct system that is documented to have been previously sealed as confirmed through field verification and diagnostic testing in accordance with procedures in the Reference Nonresidential Appendix NA2.		
17	Yes	Duct system shall be sealed in acordance with the California Mechanical Code		

The answers to the questions below apply to the following duct systems:		AH - B4	Duct leakage testing triggered for these systems?	No
11	No	The scope of the project includes only duct systems serving healthcare facilities		
12	No	Duct system provides conditioned air to an occupiable space for a constant volume, single zone, space-conditioning system.		
13	Yes	The space conditioning system serves less than 5,000 ft² of conditioned floor area.		
14	No	The combined surface area of the ducts in the following locations is more than 25% of the total surface area of the entire duct system:		
		☐	Outdoors	
		☐	In a space directly under a roof that has a U-factor greater than the u-factor of the ceiling, or if the roof does not meet the requirements of §140.3(a)1B or if the roof has fixed vents or openings to the outside/ unconditioned spaces	
		☐	In an unconditioned crawl space	

Registration Number:
Registration Date/Time:
Registration Provider: Energysoft
CA Building Energy Efficiency Standards - 2019 Nonresidential Compliance
Report Version: 2019.1.003
Schema Version: rev 20200601
Report Generated: 2022-03-04 09:13:03

STATE OF CALIFORNIA
Mechanical Systems
NRCC-MCH-E
CALIFORNIA ENERGY COMMISSION

CERTIFICATE OF COMPLIANCE		NRCC-MCH-E
Project Name:	Brix Mercer Basement Remodel	Report Page: (Page 19 of 34)
Project Address:	1221 Fulton Street	Date Prepared: 3/4/2022

J. VENTILATION AND INDOOR AIR QUALITY

Z3	Assembly- multiuse	2010			1005	0	0	DCV	Provided per §120.1(d)4
								Occ Sensor	NA: Not required space type
17	Total System Required Min OA CFM				1005	18	Ventilation for this System Complies?		Yes

04		05			06			07
System Name	AH - B4	System Design OA CFM Airflow[1]		705	System Design Transfer Air CFM		0	Air Filtration per §120.1(c) and §141.0(b)2 [2] Provided per §120.1(c) (NR and Hotel/Motel))

08	09	10	11	12	13	14	15	16	
	Mechanical Ventilation Required per §120.1(c)3 [3]					Exh. Vent per §120.1(c)4			
Space Name ot Item Tag	Occupancy Type[4]	Conditioned Floor Area (ft²)	# of Shower heads/ toilets	# of people[5]	Required Min OA CFM	Required Min CFM	Provided per Design CFM	DCV or Sensor Controls per §120.1(d)3, §120.1(d)5, and §120.1(e)3 [6]	
Z4 Prep Food Handling	Restaurant Dining Rooms	400			200	0	550	DCV	NA: Not required per §120.1(d)3
								Occ Sensor	NA: Not required space type
Z4 Storage	All others	449			67.4	0	0	DCV	NA: Not required per §120.1(d)3
								Occ Sensor	NA: Not required space type
Z4 Breakout Room	Conference/ meeting	175			87.5	0	0	DCV	Provided per §120.1(d)4
								Occ Sensor	NA: Not required space type
Z4 Lobby, Hall & Storage	All others	1113			167	0	0	DCV	NA: Not required per §120.1(d)3
								Occ Sensor	NA: Not required space type

Registration Number:
Registration Date/Time:
Registration Provider: Energysoft
CA Building Energy Efficiency Standards - 2019 Nonresidential Compliance
Report Version: 2019.1.003
Schema Version: rev 20200601
Report Generated: 2022-03-04 09:13:03

STATE OF CALIFORNIA
Mechanical Systems
NRCC-MCH-E
CALIFORNIA ENERGY COMMISSION

CERTIFICATE OF COMPLIANCE		NRCC-MCH-E
Project Name:	Brix Mercer Basement Remodel	Report Page: (Page 22 of 34)
Project Address:	1221 Fulton Street	Date Prepared: 3/4/2022

J. VENTILATION AND INDOOR AIR QUALITY

04		05			06			07
System Name	ODU 2	System Design OA CFM Airflow[1]		2987	System Design Transfer Air CFM		0	Air Filtration per §120.1(c) and §141.0(b)2 [2] Provided per §120.1(c) (NR and Hotel/Motel))

08	09	10	11	12	13	14	15	16	
	Mechanical Ventilation Required per §120.1(c)3 [3]					Exh. Vent per §120.1(c)4			
Space Name ot Item Tag	Occupancy Type[4]	Conditioned Floor Area (ft²)	# of Shower heads/ toilets	# of people[5]	Required Min OA CFM	Required Min CFM	Provided per Design CFM	DCV or Sensor Controls per §120.1(d)3, §120.1(d)5, and §120.1(e)3 [6]	
B12	Office space	1445			216.8	0	0	DCV	NA: Not required per §120.1(d)3
								Occ Sensor	NA: Not required space type
B13	Toilet, public	633	5		0	350	600	DCV	NA: Not required per §120.1(d)3
								Occ Sensor	NA: Not required space type
B14-16	Break room	1919			959.5	0	0	DCV	NA: Not required per §120.1(d)3
								Occ Sensor	NA: Not required space type
B21	Corridor	295			44.2	0	0	DCV	NA: Not required per §120.1(d)3
								Occ Sensor	NA: Not required space type
B22	Corridor	492			73.8	0	275	DCV	NA: Not required per §120.1(d)3
								Occ Sensor	NA: Not required space type

Registration Number:
Registration Date/Time:
Registration Provider: Energysoft
CA Building Energy Efficiency Standards - 2019 Nonresidential Compliance
Report Version: 2019.1.003
Schema Version: rev 20200601
Report Generated: 2022-03-04 09:13:03

STATE OF CALIFORNIA
Mechanical Systems
NRCC-MCH-E
CALIFORNIA ENERGY COMMISSION

CERTIFICATE OF COMPLIANCE		NRCC-MCH-E
Project Name:	Brix Mercer Basement Remodel	Report Page: (Page 25 of 34)
Project Address:	1221 Fulton Street	Date Prepared: 3/4/2022

L. DISTRIBUTION (DUCTWORK and PIPING)

This table is used to show compliance with mandatory pipe insulation requirements found in §120.3 and prescriptive requirements found in §140.4(l) for duct leakage testing.

Duct Leakage Sealing

The answers to the questions below apply to the following duct systems:		AH - B1	Duct leakage testing triggered for these systems?	No
11	No	The scope of the project includes only duct systems serving healthcare facilities		
12	Yes	Duct system provides conditioned air to an occupiable space for a constant volume, single zone, space-conditioning system.		
13	Yes	The space conditioning system serves less than 5,000 ft² of conditioned floor area.		
14	No	The combined surface area of the ducts in the following locations is more than 25% of the total surface area of the entire duct system:		
		☐	Outdoors	
		☐	In a space directly under a roof that has a U-factor greater than the u-factor of the ceiling, or if the roof does not meet the requirements of §140.3(a)1B or if the roof has fixed vents or openings to the outside/ unconditioned spaces	
		☐	In an unconditioned crawl space	
		☐	In other unconditioned spaces	
15		The scope of the project includes extending an existing duct system, which is constructed, insulated or sealed with asbestos.		
16		The scope of the project includes an existing duct system that is documented to have been previously sealed as confirmed through field verification and diagnostic testing in accordance with procedures in the Reference Nonresidential Appendix NA2.		
17	Yes	Duct system shall be sealed in acordance with the California Mechanical Code		

The answers to the questions below apply to the following duct systems:		AH - B2	Duct leakage testing triggered for these systems?	No
11	No	The scope of the project includes only duct systems serving healthcare facilities		
12	No	Duct system provides conditioned air to an occupiable space for a constant volume, single zone, space-conditioning system.		
13	Yes	The space conditioning system serves less than 5,000 ft² of conditioned floor area.		
14	No	The combined surface area of the ducts in the following locations is more than 25% of the total surface area of the entire duct system:		
		☐	Outdoors	
		☐	In a space directly under a roof that has a U-factor greater than the u-factor of the ceiling, or if the roof does not meet the requirements of §140.3(a)1B or if the roof has fixed vents or openings to the outside/ unconditioned spaces	
		☐	In an unconditioned crawl space	

Registration Number:
Registration Date/Time:
Registration Provider: Energysoft
CA Building Energy Efficiency Standards - 2019 Nonresidential Compliance
Report Version: 2019.1.003
Schema Version: rev 20200601
Report Generated: 2022-03-04 09:13:03

STATE OF CALIFORNIA
Mechanical Systems
NRCC-MCH-E
CALIFORNIA ENERGY COMMISSION

CERTIFICATE OF COMPLIANCE		NRCC-MCH-E
Project Name:	Brix Mercer Basement Remodel	Report Page: (Page 18 of 34)
Project Address:	1221 Fulton Street	Date Prepared: 3/4/2022

J. VENTILATION AND INDOOR AIR QUALITY

17	Total System Required Min OA CFM				1784	18	Ventilation for this System Complies?	Yes
04		05			06			07
System Name	AH - B2	System Design OA CFM Airflow[1]		1000	System Design Transfer Air CFM		0	Air Filtration per §120.1(c) and §141.0(b)2 [2] Provided per §120.1(c) (NR and Hotel/Motel))

08	09	10	11	12	13	14	15	16	
	Mechanical Ventilation Required per §120.1(c)3 [3]					Exh. Vent per §120.1(c)4			
Space Name ot Item Tag	Occupancy Type[4]	Conditioned Floor Area (ft²)	# of Shower heads/ toilets	# of people[5]	Required Min OA CFM	Required Min CFM	Provided per Design CFM	DCV or Sensor Controls per §120.1(d)3, §120.1(d)5, and §120.1(e)3 [6]	
Z2	Toilet, public	972	8		0	560	1000	DCV	Provided per §120.1(d)4
								Occ Sensor	NA: Not required space type
Z2	Corridor	658			98.7	0	0	DCV	Provided per §120.1(d)4
								Occ Sensor	NA: Not required space type
17	Total System Required Min OA CFM				99	18	Ventilation for this System Complies?		Yes

04		05			06			07
System Name	AH - B3	System Design OA CFM Airflow[1]		1047	System Design Transfer Air CFM		0	Air Filtration per §120.1(c) and §141.0(b)2 [2] Provided per §120.1(c) (NR and Hotel/Motel))

08	09	10	11	12	13	14	15	16	
	Mechanical Ventilation Required per §120.1(c)3 [3]					Exh. Vent per §120.1(c)4			
Space Name ot Item Tag	Occupancy Type[4]	Conditioned Floor Area (ft²)	# of Shower heads/ toilets	# of people[5]	Required Min OA CFM	Required Min CFM	Provided per Design CFM	DCV or Sensor Controls per §120.1(d)3, §120.1(d)5, and §120.1(e)3 [6]	
B6	All others	696			104.4	0	0	DCV	NA: Not required per §120.1(d)3
								Occ Sensor	NA: Not required space type
B7	All others	596			0	0	0	DCV	NA: Not required per §120.1(d)3
								Occ Sensor	NA: Not required space type
B8	All others	476			71.4	0	0	DCV	NA: Not required per §120.1(d)3
								Occ Sensor	NA: Not required space type
B9 204 Conference	Conference/ meeting	574			287	0	0	DCV	NA: Not required per §120.1(d)3
								Occ Sensor	NA: Not required space type
B17	Kitchen (cooking)	296			44.4	207.2	2500	DCV	NA: Not required per §120.1(d)3
								Occ Sensor	NA: Not required space type
B18	All others	294			44.1	0	0	DCV	NA: Not required per §120.1(d)3
								Occ Sensor	NA: Not required space type
B23	Corridor	273			40.9	0	0	DCV	NA: Not required per §120.1(d)3
								Occ Sensor	NA: Not required space type
17	Total System Required Min OA CFM				1061	18	Ventilation for this System Complies?		Yes

Registration Number:
Registration Date/Time:
Registration Provider: Energysoft
CA Building Energy Efficiency Standards - 2019 Nonresidential Compliance
Report Version: 2019.1.003
Schema Version: rev 20200601
Report Generated: 2022-03-04 09:13:03

STATE OF CALIFORNIA
Mechanical Systems
NRCC-MCH-E
CALIFORNIA ENERGY COMMISSION

CERTIFICATE OF COMPLIANCE		NRCC-MCH-E
Project Name:	Brix Mercer Basement Remodel	Report Page: (Page 24 of 34)
Project Address:	1221 Fulton Street	Date Prepared: 3/4/2022

J. VENTILATION AND INDOOR AIR QUALITY

[2] *Air filtration requirements apply to the following three system types per §120.1(c)1A : space conditioning systems utilizing ducts to supply air to occupiable space; supply-only ventilation systems providing outside air to occupiable space; supply side of balanced ventilation systems including heat recovery and energy recovery ventilation systems providing outside air to occupiable space.*

[3] *Uniform Mechanical Code may have more stringent ventilation requirements; the most stringent code requirement takes precedence.*

[4] *See Standards Tables 120.1-A and 120.1-B.*

[5] *For lecture halls with fixed seating, the expected number of occupants shall be shall be determined in accordance with the California Building Code.*

[6] *§120.2(e)3 requires systems serving rooms that are required by §130.1(c) to have lighting occupancy sensing controls to also have occupancy sensing zone controls for ventilation. Examples of spaces which require lighting occupancy sensors include offices 250ft² or smaller, multipurpose rooms less than 1,000 ft², classrooms, conference rooms, restrooms, aisles and open areas in warehouses, library book stack aisles, corridors, stairwells, parking garages, and loading and unloading zones, unless excepted by §130.1(c).*

K. TERMINAL BOX CONTROLS

This table is used to demonstrate compliance with prescriptive zone control requirements in §140.4(d).

01	02	03	04	05	06	07	08	09	10	11	12
		Design			Deadband Compliance			Reheated, Recooled, Mixed Air Compliance			
Zone/System/VAV Box Name or Item Tag	Zonal Control Strategy per §140.4(d)	Peak Primary Airflow CFM	Primary Air in Deadband CFM	Reheated Recooled Mixed Airflow CFM	Outside Air CFM	20% (30% if no DDC) of Peak Primary Airflow CFM	Max Deadband Airflow CFM	50% of Peak Primary Airflow	1st Stage Modulates <=95 °F and Maintains DB Rate?	2nd Stage Modulates from DB Flow to Heating Max Flow?	Complies
Z1 Mercer 202 - Meeting Room	NA: Peak SA <= 300 CFM	0	0	0	1873.2	0	1874.2	0	Yes	Yes	Yes
Z2	NA: Peak SA <= 300 CFM	0	0	0	0	0	1	0	Yes	Yes	Yes
Z2	NA: Peak SA <= 300 CFM	0	0	0	98.7	0	99.7	0	Yes	Yes	Yes
Z4 Prep Food Handling	NA: Peak SA <= 300 CFM	0	0	0	200	0	201	0	Yes	Yes	Yes
Z4 Storage	NA: Peak SA <= 300 CFM	0	0	0	67.4	0	68.4	0	Yes	Yes	Yes
Z4 Breakout Room	NA: Peak SA <= 300 CFM	0	0	0	87.5	0	88.5	0	Yes	Yes	Yes
Z4 Lobby, Hall & Storage	NA: Peak SA <= 300 CFM	0	0	0	167	0	168	0	Yes	Yes	Yes

Registration Number:
Registration Date/Time:
Registration Provider: Energysoft
CA Building Energy Efficiency Standards - 2019 Nonresidential Compliance
Report Version: 2019.1.003
Schema Version: rev 20200601
Report Generated: 2022-03-04 09:13:03

APPROVED
03/17/2023
COUNTY OF FRESNO
DEVELOPMENT SERVICES

FILE PATH:

THE COUNTY OF FRESNO 1856

LICENSED ARCHITECT
JUSTIN DOUGLAS MURATORE
NO. C38020
RENEWAL 6/23
STATE OF CALIFORNIA

MURATORE ASSOCIATES
1222 N SHAW AVE.
FRESNO, CA 93711
559-365-6934
info@muratoreassociates.com

CONSULTANT STAMP

REGISTERED PROFESSIONAL ENGINEER
RUSSELL D. LAWRENCE
M22588
REN. 9-30-2023
MECHANICAL
STATE OF CALIFORNIA

LAWRENCE ENGINEERING GROUP
7084 N. Maple Ave., Suite 101
(559) 431-0101
21003
Fresno, CA 93720
FAX (559) 431-1362

APPROVED
AUG 29 2023
FRESNO FIRE DEPARTMENT

REVISION TABLE:

REV.	DESCRIPTION	DATE

DATE: 11/15/2022
SCALE: As indicated
JOB NUMBER:

ADDRESS:
BRIX & MERCER BLDGS
1221 FULTON ST
FRESNO, CA 93721

AHJ #: 21-1137 21-105379

PROJECT:
FRESNO COUNTY DEPT. OF PUBLIC HEALTH BASEMENT RENOVATION

SHEET TITLE:
TITLE 24 DOCUMENTS

SHEET NUMBER
M-12.3

INTERNAL NUMBER: 829

STATE OF CALIFORNIA
Mechanical Systems
NRCC-MCH-E
CALIFORNIA ENERGY COMMISSION

CERTIFICATE OF COMPLIANCE			NRCC-MCH-E
Project Name:	Brix Mercer Basement Remodel	Report Page:	(Page 29 of 34)
Project Address:	1221 Fulton Street	Date Prepared:	3/4/2022

N. DECLARATION OF REQUIRED CERTIFICATES OF INSTALLATION

Selections have been made based on information provided in previous tables of this document. If any selection needs to be changed, please explain why in Table E Additional Remarks. These documents must be provided to the building inspector during construction and can be found online at https://www.energy.ca.gov/title24/2019standards/2019_compliance_documents/Nonresidential_Documents/NRCI/

Form/Title	Field Inspector	
	Pass	Fail
NRCI-MCH-01-E - Must be submitted for all buildings	☐	☐

Registration Number:
CA Building Energy Efficiency Standards - 2019 Nonresidential Compliance
Registration Date/Time:
Report Version: 2019.1.003
Schema Version: rev 20200601
Registration Provider: Energysoft
Report Generated: 2022-03-04 09:13:03

STATE OF CALIFORNIA
Mechanical Systems
NRCC-MCH-E
CALIFORNIA ENERGY COMMISSION

CERTIFICATE OF COMPLIANCE			NRCC-MCH-E
Project Name:	Brix Mercer Basement Remodel	Report Page:	(Page 32 of 34)
Project Address:	1221 Fulton Street	Date Prepared:	3/4/2022

O. DECLARATION OF REQUIRED CERTIFICATES OF ACCEPTANCE

Selections have been made based on information provided in previous tables of this document. If any selection needs to be changed, please explain why in Table E Additional Remarks. These documents must be provided to the building inspector during construction and can be found online at https://www.energy.ca.gov/title24/2019standards/2019_compliance_documents/Nonresidential_Documents/NRCA/

Form/Title	Systems/Spaces To Be Field Verified	Field Inspector	
		Pass	Fail
NRCA-MCH-13-A Automatic FDD for Air Handling Units and Zone Terminal Units Acceptance	*Daikin Vision - CAH012GDAM; **Daikin Vision - CAH008GDAC; ***Daikin Vision - CAH006GDAC; ****Daikin Vision - CAH008GDAC;	☐	☐
NRCA-MCH-16-A Supply Air Temperature Reset Controls	Rotary Inverter - REYQ240AAYDA; Daikin - REYQ72XAYDA;	☐	☐
NRCA-MCH-18-A Energy Management Control Systems	*Daikin Vision - CAH012GDAM; **Daikin Vision - CAH008GDAC; ***Daikin Vision - CAH006GDAC; ****Daikin Vision - CAH008GDAC; Rotary Inverter - REYQ240AAYDA; Rotary Inverter - REYQ240AAYDA; Daikin - REYQ72XAYDA;	☐	☐

P. DECLARATION OF REQUIRED CERTIFICATES OF VERIFICATION

There are no NRCV forms required for this project.

Registration Number:
CA Building Energy Efficiency Standards - 2019 Nonresidential Compliance
Registration Date/Time:
Report Version: 2019.1.003
Schema Version: rev 20200601
Registration Provider: Energysoft
Report Generated: 2022-03-04 09:13:03

STATE OF CALIFORNIA
Mechanical Systems
NRCC-MCH-E
CALIFORNIA ENERGY COMMISSION

CERTIFICATE OF COMPLIANCE			NRCC-MCH-E
Project Name:	Brix Mercer Basement Remodel	Report Page:	(Page 28 of 34)
Project Address:	1221 Fulton Street	Date Prepared:	3/4/2022

L. DISTRIBUTION (DUCTWORK and PIPING)

		☐	In other unconditioned spaces
15		The scope of the project includes extending an existing duct system, which is constructed, insulated or sealed with asbestos.	
16		The scope of the project includes an existing duct system that is documented to have been previously sealed as confirmed through field verification and diagnostic testing in accordance with procedures in the Reference Nonresidential Appendix NA2.	
17	Yes	Duct system shall be sealed in accordance with the California Mechanical Code	
The answers to the questions below apply to the following duct systems:		ODU 3	Duct leakage testing triggered for these systems? No
11	No	The scope of the project includes only duct systems serving healthcare facilities	
12	No	Duct system provides conditioned air to an occupiable space for a constant volume, single zone, space-conditioning system.	
13	Yes	The space conditioning system serves less than 5,000 ft² of conditioned floor area.	
14	No	The combined surface area of the ducts in the following locations is more than 25% of the total surface area of the entire duct system:	
		☐	Outdoors
		☐	In a space directly under a roof that has a U-factor greater than the u-factor of the ceiling, or if the roof does not meet the requirements of §140.3(a)1B or if the roof has fixed vents or openings to the outside/ unconditioned spaces
		☐	In an unconditioned crawl space
		☐	In other unconditioned spaces
15		The scope of the project includes extending an existing duct system, which is constructed, insulated or sealed with asbestos.	
16		The scope of the project includes an existing duct system that is documented to have been previously sealed as confirmed through field verification and diagnostic testing in accordance with procedures in the Reference Nonresidential Appendix NA2.	
17	Yes	Duct system shall be sealed in accordance with the California Mechanical Code	

M. COOLING TOWERS

This section does not apply to this project.

Registration Number:
CA Building Energy Efficiency Standards - 2019 Nonresidential Compliance
Registration Date/Time:
Report Version: 2019.1.003
Schema Version: rev 20200601
Registration Provider: Energysoft
Report Generated: 2022-03-04 09:13:03

STATE OF CALIFORNIA
Mechanical Systems
NRCC-MCH-E
CALIFORNIA ENERGY COMMISSION

CERTIFICATE OF COMPLIANCE			NRCC-MCH-E
Project Name:	Brix Mercer Basement Remodel	Report Page:	(Page 31 of 34)
Project Address:	1221 Fulton Street	Date Prepared:	3/4/2022

O. DECLARATION OF REQUIRED CERTIFICATES OF ACCEPTANCE

Selections have been made based on information provided in previous tables of this document. If any selection needs to be changed, please explain why in Table E Additional Remarks. These documents must be provided to the building inspector during construction and can be found online at https://www.energy.ca.gov/title24/2019standards/2019_compliance_documents/Nonresidential_Documents/NRCA/

Form/Title	Systems/Spaces To Be Field Verified	Field Inspector	
		Pass	Fail
NRCA-MCH-05-A - Air Economizer Controls	*Daikin Vision - CAH012GDAM; **Daikin Vision - CAH008GDAC; ***Daikin Vision - CAH006GDAC; ****Daikin Vision - CAH008GDAC;	☐	☐
NRCA-MCH-06-A Demand Control Ventilation Systems must be submitted for all systems required to employ demand controlled ventilation (refer to §120.1(c)3) can vary outside ventilation flow rates based on maintaining interior carbon dioxide (CO_2) concentration setpoints.	*Daikin Vision - CAH012GDAM; **Daikin Vision - CAH008GDAC; ***Daikin Vision - CAH006GDAC; ****Daikin Vision - CAH008GDAC;	☐	☐
NRCA-MCH-07-A Supply Fan Variable Flow Controls	*Daikin Vision - CAH012GDAM; **Daikin Vision - CAH008GDAC; ***Daikin Vision - CAH006GDAC; ****Daikin Vision - CAH008GDAC;	☐	☐
NRCA-MCH-11-A Automatic Demand Shed Controls	*Daikin Vision - CAH012GDAM; **Daikin Vision - CAH008GDAC; ***Daikin Vision - CAH006GDAC; ****Daikin Vision - CAH008GDAC; Rotary Inverter - REYQ240AAYDA; Rotary Inverter - REYQ240AAYDA; Daikin - REYQ72XAYDA;	☐	☐

Registration Number:
CA Building Energy Efficiency Standards - 2019 Nonresidential Compliance
Registration Date/Time:
Report Version: 2019.1.003
Schema Version: rev 20200601
Registration Provider: Energysoft
Report Generated: 2022-03-04 09:13:03

STATE OF CALIFORNIA
Mechanical Systems
NRCC-MCH-E
CALIFORNIA ENERGY COMMISSION

CERTIFICATE OF COMPLIANCE			NRCC-MCH-E
Project Name:	Brix Mercer Basement Remodel	Report Page:	(Page 34 of 34)
Project Address:	1221 Fulton Street	Date Prepared:	3/4/2022

DOCUMENTATION AUTHOR'S DECLARATION STATEMENT

I certify that this Certificate of Compliance documentation is accurate and complete.

Documentation Author Name: Abel Lopez	Documentation Author Signature: Abel Lopez
Company: Lawrence Engineering Group	Signature Date: 22-03-04
Address: 7084 N Maple Avenue Suite 101	CEA/ HERS Certification Identification (if applicable):
City/State/Zip: Fresno CA 93720	Phone: 559-431-0101

RESPONSIBLE PERSON'S DECLARATION STATEMENT

I certify the following under penalty of perjury, under the laws of the State of California:

1. The information provided on this Certificate of Compliance is true and correct.
2. I am eligible under Division 3 of the Business and Professions Code to accept respons/bility for the building design or system design identified on this Certificate of Compliance (responsible designer)
3. The energy features and performance specifications, materials, components, and manufactured devices for the building design or system design identified on this Certificate of Compliance conform to the requirements of Title 24, Part 1 and Part 6 of the California Code of Regulations.
4. The building design features or system design features identified on this Certificate of Compliance are consistent with the information provided on other applicable compliance documents, worksheets, calculations, plans and specifications submitted to the enforcement agency for approval with this building permit application.
5. I will ensure that a completed signed copy of this Certificate of Compliance shall be made available with the building permit(s) issued for the building, and made available to the enforcement agency for all applicable inspections. I understand that a completed signed copy of this Certificate of Compliance is required to be included with the documentation the builder provides to the building owner at occupancy.

Responsible Designer Name: Michael D. Canteimi	Responsible Designer Signature:
Company: Lawrence Engineering Group	Date Signed: 2022-03-04
Address: 7084 North Maple Avenue Suite 101	License: M23588
City/State/Zip: Fresno CA 93720	Phone: 5594310101

Registration Number:
CA Building Energy Efficiency Standards - 2019 Nonresidential Compliance
Registration Date/Time:
Report Version: 2019.1.003
Schema Version: rev 20200601
Registration Provider: Energysoft
Report Generated: 2022-03-04 09:13:03

STATE OF CALIFORNIA
Mechanical Systems
NRCC-MCH-E
CALIFORNIA ENERGY COMMISSION

CERTIFICATE OF COMPLIANCE			NRCC-MCH-E
Project Name:	Brix Mercer Basement Remodel	Report Page:	(Page 27 of 34)
Project Address:	1221 Fulton Street	Date Prepared:	3/4/2022

L. DISTRIBUTION (DUCTWORK and PIPING)

		☐	In other unconditioned spaces
15		The scope of the project includes extending an existing duct system, which is constructed, insulated or sealed with asbestos.	
16		The scope of the project includes an existing duct system that is documented to have been previously sealed as confirmed through field verification and diagnostic testing in accordance with procedures in the Reference Nonresidential Appendix NA2.	
17	Yes	Duct system shall be sealed in accordance with the California Mechanical Code	
The answers to the questions below apply to the following duct systems:		VRF ODU 1	Duct leakage testing triggered for these systems? No
11	No	The scope of the project includes only duct systems serving healthcare facilities	
12	No	Duct system provides conditioned air to an occupiable space for a constant volume, single zone, space-conditioning system.	
13	No	The space conditioning system serves less than 5,000 ft² of conditioned floor area.	
14	No	The combined surface area of the ducts in the following locations is more than 25% of the total surface area of the entire duct system:	
		☐	Outdoors
		☐	In a space directly under a roof that has a U-factor greater than the u-factor of the ceiling, or if the roof does not meet the requirements of §140.3(a)1B or if the roof has fixed vents or openings to the outside/ unconditioned spaces
		☐	In an unconditioned crawl space
		☐	In other unconditioned spaces
15		The scope of the project includes extending an existing duct system, which is constructed, insulated or sealed with asbestos.	
16		The scope of the project includes an existing duct system that is documented to have been previously sealed as confirmed through field verification and diagnostic testing in accordance with procedures in the Reference Nonresidential Appendix NA2.	
17	Yes	Duct system shall be sealed in accordance with the California Mechanical Code	
The answers to the questions below apply to the following duct systems:		ODU 2	Duct leakage testing triggered for these systems? No
11	No	The scope of the project includes only duct systems serving healthcare facilities	
12	No	Duct system provides conditioned air to an occupiable space for a constant volume, single zone, space-conditioning system.	
13	Yes	The space conditioning system serves less than 5,000 ft² of conditioned floor area.	
14	No	The combined surface area of the ducts in the following locations is more than 25% of the total surface area of the entire duct system:	
		☐	Outdoors
		☐	In a space directly under a roof that has a U-factor greater than the u-factor of the ceiling, or if the roof does not meet the requirements of §140.3(a)1B or if the roof has fixed vents or openings to the outside/ unconditioned spaces
		☐	In an unconditioned crawl space

Registration Number:
CA Building Energy Efficiency Standards - 2019 Nonresidential Compliance
Registration Date/Time:
Report Version: 2019.1.003
Schema Version: rev 20200601
Registration Provider: Energysoft
Report Generated: 2022-03-04 09:13:03

STATE OF CALIFORNIA
Mechanical Systems
NRCC-MCH-E
CALIFORNIA ENERGY COMMISSION

CERTIFICATE OF COMPLIANCE			NRCC-MCH-E
Project Name:	Brix Mercer Basement Remodel	Report Page:	(Page 30 of 34)
Project Address:	1221 Fulton Street	Date Prepared:	3/4/2022

O. DECLARATION OF REQUIRED CERTIFICATES OF ACCEPTANCE

Selections have been made based on information provided in previous tables of this document. If any selection needs to be changed, please explain why in Table E Additional Remarks. These documents must be provided to the building inspector during construction and can be found online at https://www.energy.ca.gov/title24/2019standards/2019_compliance_documents/Nonresidential_Documents/NRCA/

Form/Title	Systems/Spaces To Be Field Verified	Field Inspector	
		Pass	Fail
NRCA-MCH-02-A - Outdoor Air must be submitted for all newly installed HVAC units. Note: MCH-02-A can be performed in conjunction with MCH-07-A Supply Fan VFD Acceptance (if applicable) since testing activities overlap.	*Daikin Vision - CAH012GDAM; **Daikin Vision - CAH008GDAC; ***Daikin Vision - CAH006GDAC; ****Daikin Vision - CAH008GDAC; Rotary Inverter - REYQ240AAYDA; Rotary Inverter - REYQ240AAYDA; Daikin - REYQ72XAYDA;	☐	☐

APPROVED
03/17/2023
COUNTY OF FRESNO
DEVELOPMENT SERVICES

Registration Number:
CA Building Energy Efficiency Standards - 2019 Nonresidential Compliance
Registration Date/Time:
Report Version: 2019.1.003
Schema Version: rev 20200601
Registration Provider: Energysoft
Report Generated: 2022-03-04 09:13:03

STATE OF CALIFORNIA
Mechanical Systems
NRCC-MCH-E
CALIFORNIA ENERGY COMMISSION

CERTIFICATE OF COMPLIANCE			NRCC-MCH-E
Project Name:	Brix Mercer Basement Remodel	Report Page:	(Page 33 of 34)
Project Address:	1221 Fulton Street	Date Prepared:	3/4/2022

Q. MANDATORY MEASURES DOCUMENTATION LOCATION

This table is used to indicate where mandatory measures are documented in the plan set or construction documentation.

	01.	02.
Compliance with Mandatory Measures documented through MCH Mandatory Measures Note Block	Yes	M-Sheets

Registration Number:
CA Building Energy Efficiency Standards - 2019 Nonresidential Compliance
Registration Date/Time:
Report Version: 2019.1.003
Schema Version: rev 20200601
Registration Provider: Energysoft
Report Generated: 2022-03-04 09:13:03

THE COUNTY OF FRESNO 1856

LICENSED ARCHITECT JUSTIN DOUGLAS MURATORE NO. C38020 RENEWAL 8/23 STATE OF CALIFORNIA

MURATORE ASSOCIATES
1222 N SHAW AVE. FRESNO, CA 93711
559-365-6834
info@muratoreassociates.com

CONSULTANT STAMP

REGISTERED PROFESSIONAL ENGINEER MICHAEL D. CANTELMI M23588 REN. 9-30-2022 MECHANICAL STATE OF CALIFORNIA

LAWRENCE ENGINEERING GROUP
7084 N. Maple Ave., Suite 101
(559) 431-0101
21003
Fresno, CA 93720
FAX (559) 431-1362

APPROVED
AUG 29 2024 BY
FRESNO FIRE DEPARTMENT

REVISION TABLE:

REV.	DESCRIPTION	DATE

DATE: 11/15/2022
SCALE: As indicated
JOB NUMBER:

ADDRESS:
BRIX & MERCER BLDGS
1221 FULTON ST
FRESNO, CA 93721

AHJ #: 21-1137 21-105379

PROJECT:
FRESNO COUNTY DEPT. OF PUBLIC HEALTH BASEMENT RENOVATION

SHEET TITLE:
TITLE 24 DOCUMENTS

SHEET NUMBER
M-12.4

FILE PATH:

INTERNAL NUMBER: 829

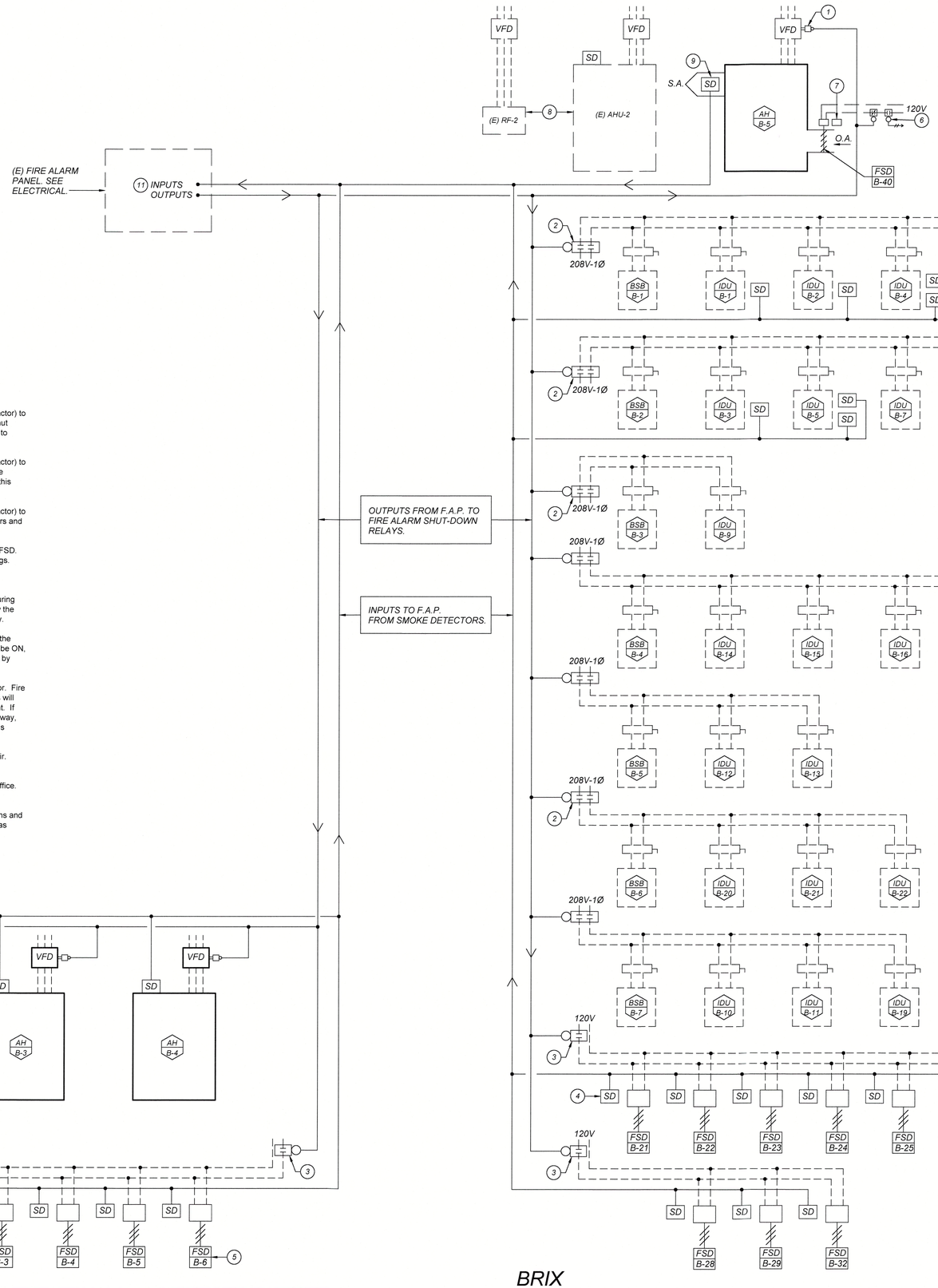

KEYNOTES: (THIS SHEET ONLY)

1. Typical Fire Alarm Relay (by Fire Alarm Contractor) to interrupt Air Handler VFD Enable circuit and shut down fan. Relay shall be double throw. Refer to Electrical Drawings.
2. Typical Fire Alarm Relay (by Fire Alarm Contractor) to interrupt IDU fans on this circuit. Relay shall be DPDT. This relay will stop all the IDU fans on this circuit. Refer to Electrical Drawings.
3. Typical Fire Alarm Relay (by Fire Alarm Contractor) to interrupt common circuit to Fire/Smoke Dampers and cause them to close.
4. Typical duct-smoke detector corresponding to FSD. Locate within 5' of VFD. See Electrical Drawings.
5. Typical fire/smoke damper by Mechanical.
6. EMS (SPDT) relay to control smoke damper during normal building operation. Damper shall follow the schedule of AH/B-5 and close at the end of day.
7. End switch package furnished with damper. If the damper is closed when AH/B-5 is supposed to be ON, an ALARM shall be issued to the EMS. Wiring by EMS contractor to AH controller.
8. Existing supply and return fans for Ground Floor. Fire Alarm Contractor to verify that existing controls will shut down both fans upon a fire or smoke event. If the Ground Floor system is not connected this way, provide equipment and wiring to accomplish this sequence.
9. Typical smoke detector at Air Handler supply air.
10. No supply-air, duct detector required because duct-smoke detector used with FSD/B-1 will suffice.
11. SEQUENCE: Any fire or smoke event at the Basement or Ground Floor will turn OFF the fans and close fire/smoke dampers and smoke damper as shown. Refer to Electrical Drawings.

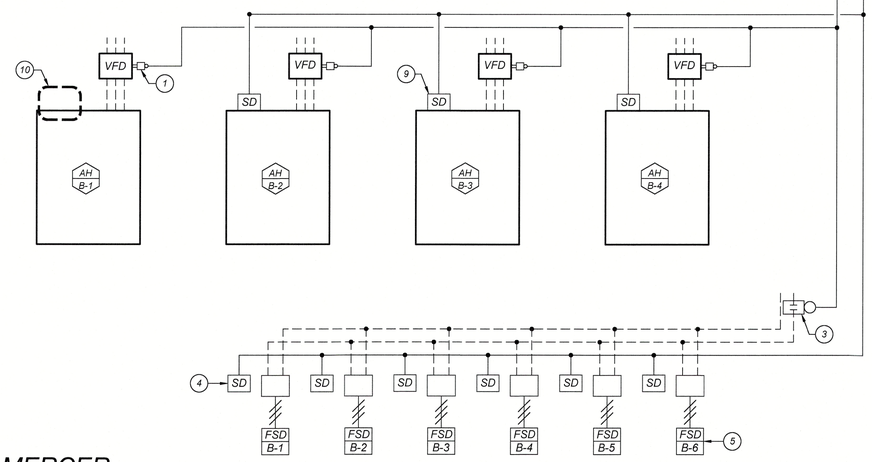

MERCER

SCALE: NONE

DIAGRAM SHOWN IS FOR REFERENCE ONLY. SEE ELECTRICAL DRAWINGS FOR SCOPE OF WORK.

APPROVED
03/17/2023
COUNTY OF FRESNO
DEVELOPMENT SERVICES

BRIX

SCALE: NONE

THE COUNTY OF FRESNO 1856

LICENSED ARCHITECT
JUSTIN DOUGLAS MURATORE
NO. C38020
RENEWAL: 8/23
STATE OF CALIFORNIA

MURATORE ASSOCIATES
1222 N SHAW AVE.
FRESNO, CA 93711
559-368-9684
info@muratoreassociates.com

CONSULTANT STAMP

REGISTERED PROFESSIONAL ENGINEER
DARRELL D. CHRISTENSEN
M22588
REN. 9-30-2023
MECHANICAL
STATE OF CALIFORNIA

LAWRENCE ENGINEERING GROUP
7084 N. Maple Ave., Suite 101
(559) 431-0101
21003
Fresno, CA 93720
FAX (559) 431-1362

APPROVED
AUG 29 2024 BY
FRESNO FIRE DEPARTMENT

REVISION TABLE:

REV.	DESCRIPTION	DATE

DATE: 11/15/2022
SCALE: As indicated
JOB NUMBER:

ADDRESS:

BRIX & MERCER BLDGS
1221 FULTON ST
FRESNO, CA 93721

AHJ #: 21-1137 21-105379

PROJECT:

FRESNO COUNTY DEPT. OF PUBLIC HEALTH BASEMENT RENOVATION

SHEET TITLE:

FIRE ALARM HVAC FANS AND FSDS SHUT-DOWN DIAGRAM

SHEET NUMBER

M-15

FILE PATH:

INTERNAL NUMBER: 829