PLANS FOR CONSTRUCTION

FEDERAL BRIDGE REPLACEMENT PROJECT

TRAVERS CREEK BRIDGE ON E MANNING AVE

BRIDGE NO: 42C-0175, BRLS-5942 (198)

TO BE SUPPLEMENTED BY THE STATE STANDARD PLANS AND SPECIFICATIONS DATED 2023.

INDEX OF SHEETS

PAGE	SHEET NO.	DESCRIPTION
1	T-1	TITLE SHEET
2	LS-1	LEGEND SHEET
	ROADWAY PLANS	
3-5	X-1 TO X-3	TYPICAL CROSS SECTIONS
6	PC-1	PROJECT CONTROL
7-10	L-1 TO L-4	LAYOUT
11-12	P-1 TO P-2	PROFILE
13-17	CD-1 TO CD-5	CONSTRUCTION DETAILS
18-19	EC-1 TO EC-2	EROSION CONTROL PLAN
20-21	CG-1 TO CG-2	CONTOUR GRADING
22-23	D-1 TO D-2	DRAINAGE PLAN
24-26	DP-1 TO DP-3	DRAINAGE PROFILES
27-29	U-1 TO U-3	UTILITY PLAN
30	CS-1	CONSTRUCTION AREA SIGNS
31-37	SC-1 TO SC-7	STAGE CONSTRUCTION AND TRAFFIC HANDLING PLAN STAGES
38-41	PD-1 TO PD-4	PAVEMENT DELINEATION AND SIGN PLANS
	BRIDGE PLANS	
42-43	ST-1 TO ST-2	GENERAL PLAN AND INDEX TO PLANS
44	ST-3	DECK CONTOURS
45	ST-4	FOUNDATION PLAN
46	ST-5	STAGED CONSTRUCTION
47-48	ST-6 TO ST-7	ABUTMENT LAYOUT
49-54	ST-8 TO ST-13	ABUTMENT DETAILS
55	ST-14	TYPICAL SECTION
56	ST-15	PRECAST SLAB LAYOUT
57-60	ST-16 TO ST-19	PRECAST SLAB DETAILS
61	ST-20	STRUCTURE APPROACH DETAILS
62	ST-21	LOG OF TEST BORING

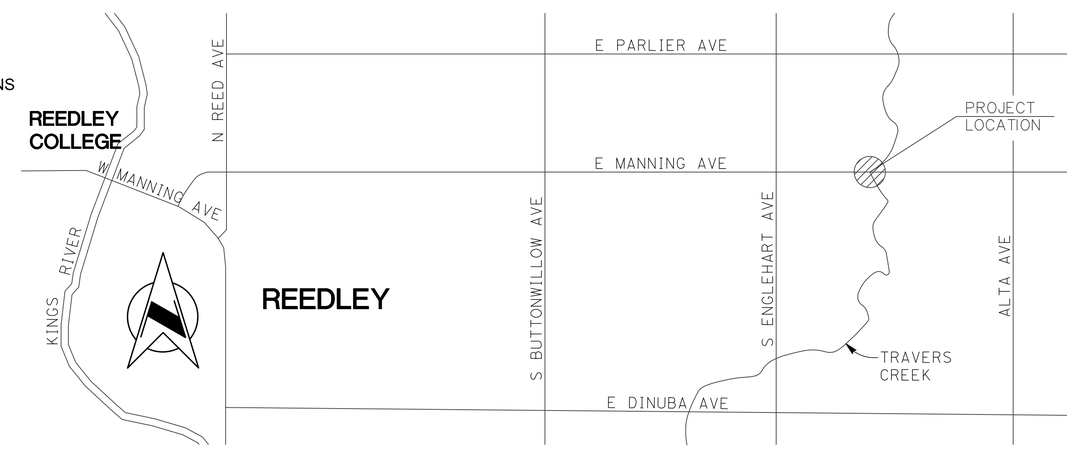

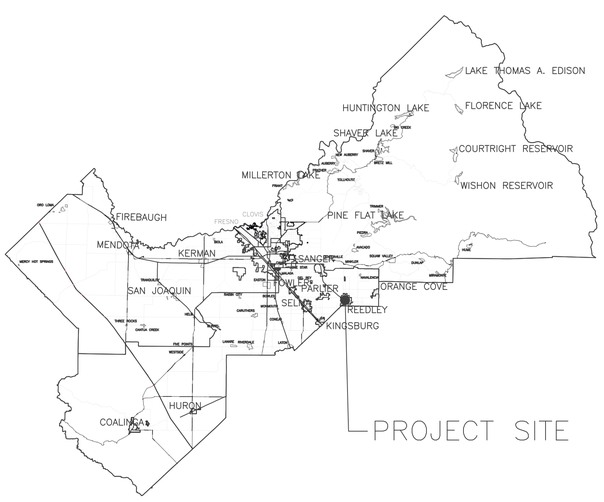

Brian Pacheco		1st	District
Garry Bredefeld	Chairman	2nd	District
Luis Chavez	Vice-Chairman	3rd	District
Ernest "Buddy" Mendes		4th	District
Nathan Magsig		5th	District

Paul Nerland
County Administrative Officer

APPROVED Steve White Digitally signed by Steve White Date: 2026.07.24 11:54:44 -07'00'

Steven E. White, Director
Department of Public Works and Planning

CALIFORNIA CONTRACTOR'S LICENSES REQUIRED FOR THIS PROJECT					
CLASS A, GENERAL ENGINEERING & CLASS C-12, EARTHWORK AND PAVING					
DRAWING NO.	ROAD NO.	BRIDGE NO.	FISCAL YR.	SHEET NO.	TOTAL
11256	S0900	42C-0175	2026-2027	T-1	62
CONTRACT NO. 26-01-C					

RECORD DRAWING		
CONTRACTOR		
NAME		
ADDRESS		
CITY	STATE	ZIP
PHONE		
DATE AWARDED		
DATE STARTED		
DATE COMPLETED		
RESIDENT ENGINEER		
NAME	SIGNATURE	
NAME	SIGNATURE	

THE COUNTY OF FRESNO 1856

DEPARTMENT OF PUBLIC WORKS AND PLANNING

GENERAL LEGEND

2023 CALTRANS STANDARD PLANS LIST

■ INDICATES APPLICABLE PLAN

■	A20A	PAVEMENT MARKERS AND TRAFFIC LINES TYPICAL DETAILS
■	A20B	PAVEMENT MARKERS AND TRAFFIC LINES TYPICAL DETAILS
□	A20C	PAVEMENT MARKERS AND TRAFFIC LINES TYPICAL DETAILS
□	A20D	PAVEMENT MARKERS AND TRAFFIC LINES TYPICAL DETAILS
□	A24A	PAVEMENT MARKINGS ARROWS
□	A24B	PAVEMENT MARKINGS ARROWS AND SYMBOLS
□	A24C	PAVEMENT MARKINGS SYMBOLS AND NUMERALS
□	A24D	PAVEMENT MARKINGS WORDS
□	A24E	PAVEMENT MARKINGS WORDS, LIMIT AND YIELD LINES
□	A24F	PAVEMENT MARKINGS CROSSWALKS
■	A62A	EXCAVATION AND BACKFILL MISCELLANEOUS DETAILS
□	A62B	LIMITS OF PAYMENT FOR EXCAVATION AND BACKFILL BRIDGE SURCHARGE AND WALL
□	A62C	LIMITS OF PAYMENT FOR EXCAVATION AND BACKFILL BRIDGE
□	A62D	EXCAVATION AND BACKFILL CONCRETE PIPE CULVERTS
□	A62DA	EXCAVATION AND BACKFILL CONCRETE PIPE CULVERTS INDIRECT DESIGN METHOD
□	A62E	EXCAVATION AND BACKFILL CAST-IN-PLACE REINFORCED CONCRETE BOX AND ARCH CULVERTS
□	A62F	EXCAVATION AND BACKFILL METAL AND PLASTIC CULVERTS
□	A62G	EXCAVATION AND BACKFILL PRECAST REINFORCED CONCRETE BOX CULVERTS
■	A73A	OBJECT MARKERS
■	A73B	MARKERS
■	A73C	DELINEATORS, CHANNELIZERS, AND BARRICADES
□	A74	SURVEY MONUMENTS
■	A78A	THRIE BEAM BARRIER STANDARD RAILING SECTION (WOOD POST WITH WOOD BLOCK)
■	A78C1	THRIE BEAM BARRIER STANDARD HARDWARE DETAILS
■	A78C2	THRIE BEAM BARRIER POST AND BLOCK DETAILS
■	A78E1	SINGLE THRIE BEAM BARRIER END ANCHOR ASSEMBLY AND TERMINAL SYSTEM END TREATMENT
□	A81C	CRASH CUSHION, SAND FILLED (BIDIRECTIONAL)
■	A85	CHAIN LINK FENCE
■	A86	BARBED WIRE AND WIRE MESH FENCES
□	A87A	CURBS AND DRIVEWAYS
■	A87B	HOT MIX ASPHALT DIKES
□	A88A	CURB RAMP DETAILS
□	B3-7A	RETAINING WALL TYPE 6 (CASE 1)
□	B3-7C	RETAINING WALL TYPE 6 DETAILS
□	D73	DRAINAGE INLETS
□	D74A	DRAINAGE INLETS
□	D74B	DRAINAGE INLETS
□	D74C	DRAINAGE INLET DETAILS
■	D75A	STEEL PIPE INLETS
□	D75B	CONCRETE PIPE INLETS
□	D75C	PIPE INLETS LADDER AND TRASH RACK DETAILS
□	D77A	GRATE DETAILS No. 1
□	D77B	GRATE DETAILS No. 2
□	P74	PAVEMENT EDGE TREATMENTS
□	P75	PAVEMENT EDGE TREATMENTS - OVERLAYS
□	P76	PAVEMENT EDGE TREATMENTS - NEW CONSTRUCTION
□	T1A	TEMPORARY CRASH CUSHION, SAND FILLED (UNIDIRECTIONAL)
□	T1B	TEMPORARY CRASH CUSHION, SAND FILLED (BIDIRECTIONAL)
□	T2	TEMPORARY CRASH CUSHION, SAND FILLED (SHOULDER INSTALLATIONS)
□	T3	TEMPORARY RAILING (TYPE K)
□	T56	TEMPORARY FIBER ROLL
□	T57	TEMPORARY CHECK DAM
□	T61	TEMPORARY DRAINAGE INLET PROTECTION
□	T65	TEMPORARY HIGH-VISIBILITY FENCE

CONSTRUCTION AND TOPOGRAPHIC LINES

- GFL — GFL — GFL — EP
- CUT & FILL
- R/W — EXIST R/W
- PROPOSED R/W
- SAWCUT
- 9+80 9+90 10+00 10+10 10+20 — STATION LINE
- GRADE BREAK
- ORIGINAL GROUND (OG)
- SECTION LINE

GENERAL NOTES

1. THE DIMENSIONS SHOWN ARE SUBJECT TO THE TOLERANCES SPECIFIED IN THE CALTRANS STANDARD SPECIFICATIONS AND SPECIAL PROVISIONS THERETO.
2. CALTRANS STANDARD SPECIFICATIONS - 2023 EDITION
3. SAW-CUT AND DEMOLITION AREAS ARE TO BE VERIFIED BY THE ENGINEER PRIOR TO DEMOLITION. ANY ADDITIONAL DEMOLITION SHALL BE APPROVED BY THE ENGINEER.
4. THE CONTRACTOR SHALL COORDINATE WITH ANY UTILITY COMPANIES THAT REQUIRE THEIR FACILITIES TO BE ADJUSTED TO GRADE. THE CONTRACTOR IS RESPONSIBLE FOR CHECKING EACH SITE AND IDENTIFYING ANY UTILITIES THAT MAY REQUIRE ADJUSTMENT. ANY UNFORESEEN DELAY SHALL BE BROUGHT TO THE ENGINEER'S ATTENTION IMMEDIATELY IN WRITING.
5. APPLY TACK COAT TO EXISTING AC PRIOR TO PAVING, INCLUDING VERTICAL JOINTS.

ABBREVIATIONS

AB	AGGREGATE BASE	DIA	DIAMETER	LT	LEFT	R/W	RIGHT OF WAY
ABUT	ABUTMENT(S)	DIR	DIRECTION	MAX	MAXIMUM	S	SLOPE
AC	ASPHALT CONCRETE	DIST	DISTANCE	MB	METAL BEAM	SALV	SALVAGE
AHD	AHEAD	DO	DRAINAGE OUTLET	MBGR	METAL BEAM GUARD RAILING	SBL	SOUTH BOUND LANE
ALIGN	ALIGNMENT	DRWY	DRIVEWAY	MH	MANHOLE	SEC	SECTION
ALY	ALLEY	EA	EACH	MI	MILE (S)	SDWK	SIDEWALK
AP	ANGLE POINT	EASE	EASEMENT	MIN	MINIMUM	SH	STATE HIGHWAY
APCH	APPROACH	EB	END OF BRIDGE	MISC	MISCELLANEOUS	SHLDR	SHOULDER
APPROX	APPROXIMATE ± ( )	E/B	EAST BOUND	MOD	MODIFY (IED)	SHT	SHEET
AS	AGGREGATE SUBBASE	EC	END HORIZONTAL CURVE	MON	MONUMENT	S/L	SECTION LINE
ASSY	ASSEMBLY	ECR	END CURB RETURN	MP	MILE POST	SP	STANDPIPE
AV	AIR RELEASE VALVE	ED	END DIKE	MTL	MATERIAL	SQ	SQUARE
AVE	AVENUE	ELEV	ELEVATION	N/A	NOT APPLICABLE	SQ FT	SQUARE FOOT (FEET)
BB	BEGINNING OF BRIDGE	(ELEV)	EXISTING ELEVATION	NBL	NORTH BOUND LANE	SQ IN	SQUARE INCH
BC	BEGIN HORIZONTAL CURVE	EMB	EMBANKMENT	NO (#)	NUMBER	SQYD	SQUARE YARD
BCM	BRASS CAP MONUMENT	EP	EDGE OF PAVEMENT	NS	NATIVE SOIL	ST	STREET
BCR	BEGIN CURB RETURN	EQ	EQUAL	OC	ON CENTER	STA	STATION
BEG	BEGIN(ING)	ES	EDGE OF SHOULDER	OD	OUTSIDE DIAMETER	STD	STANDARD
BKF	BACKFILL	ETL	EDGE OF TRAVEL LANE	OG	ORIGINAL GROUND	STR	STRUCTURE (S)
BLDG	BUILDING	EVC	END VERTICAL CURVE	PB	PULL BOX	SURF	SURFACING
BLVD	BOULEVARD	EW	ENDWALL	PBS	PULV BIT SURF	STP	STEEL PIPE
BM	BENCH MARK	EXC	EXCAVATION	PE	POLYETHYLENE	SWR	SEWER
BR	BRIDGE	EXIST / (E)	EXISTING	PCC	PORTLAND CEMENT CONCRETE	TAN OFF	TANGENT OFFSET
BVC	BEGIN VERTICAL CURVE	EXP JT	EXPANSION JOINT	PERM	PERMEABLE	TBM	TEMPORARY BM
BW	BARBED WIRE	FCBCM	FRESNO COUNTY BCM	PG	PROFILE GRADE	TBR	TIMBER
CC	CENTER TO CENTER	FFW	FRONT FACE OF WALK	PI	POINT OF INTERSECTION	TCP	TEMPORARY CONST PERMIT
CF	CUBIC FOOT (FEET)	FG	FINISHED GRADE	PL	PLATE	TBC	TOP BACK OF CURB
CFS	CUBIC FEET PER SECOND	FH	FIRE HYDRANT	P/L	PROPERTY LINE	TBW	TOP BACK OF WALK
C & G	CURB AND GUTTER	FL	FLOW LINE	PM	POST MILE	TFC	TOP FACE OF CURB
CHNL	CHANNEL	FRE	FRESNO	POC	POINT ON CURVE	TFP	TRANSFORMER POLE
CI	CITY	FT	FOOT (FEET)	POT	POINT ON TANGENT	TOT	TOTAL
CIDH	CAST-IN DRILLED HOLE	GAL	GALLON (S)	PP	POWER POLE	TP	TELEPHONE POLE
CIP	CAST IRON PIPE	GV	GAS VALVE	PPP	PERFORATED PLASTIC PIPE	TCB	TRAFFIC CONTROL BOX
CIPCP	CAST-IN-PLACE CONCRETE PIPE	GFL	GUTTER FLOW LINE	PRF	PAVEMENT REINFORCING FABRIC	TRANS	TRANSITION
C/L	CENTER LINE (℄)	GB	GRADE BREAK	PSF	POUNDS PER SQUARE FOOT	TS	TRAFFIC SIGNAL
CL	CHAIN LINK	GP	GRADING PLANE	PSI	POUNDS PER SQUARE INCH	TYP	TYPICAL
CLR	CLEAR (ING), CLEARANCE	GRUB	GRUBBING	PT	PEDESTAL TELEPHONE	TYP SEC	TYPICAL SECTION
CMP	CORRUGATED METAL PIPE	GW	GUY WIRE	PNT	POINT	UC	UNDERCROSSING
CMPA	CORRUGATED METAL PIPE ARCH	HORIZ	HORIZONTAL	PULV	PULVERIZED	UG	UNDERGROUND
CNS	COMPACTED NATIVE SOIL	HP	HINGE POINT	PVC	POLYVINYL CHLORIDE	UD	UNDERDRAIN
CNL	CLEAN NEAT LINE	HS	HIGH STRENGTH	PVMT	PAVEMENT	UDR	UNDERDRAIN RISER
CO	COUNTY	HW	HEAD WALL	R	RADIUS	UP	UNDERPASS
COMM	COMMERCIAL	HWM	HIGH WATER MARK	RCB	REINFORCED CONCRETE BOX	VAR	VARIES (ABLE)
CONC	CONCRETE	HWY	HIGHWAY	RCP	REINFORCED CONCRETE PIPE	VC	VERTICAL CURVE
CONST	CONSTRUCT (ION)	IB	IMPORTED BORROW	RD	ROAD	VCP	VITRIFIED CLAY PIPE
CONT	CONTINUOUS	ID	INSIDE DIAMETER	R & R	REMOVE AND REPLACE	VERT	VERTICAL
CP	CONCRETE PIPE	IP	IRON PIPE	REINF	REINFORCED (MENT) (ING)	VG	VALLEY GUTTER
CP	CONCRETE PIPE	IRR	IRRIGATION	REL	RELOCATE	VP	VENT PIPE
CR	CURB RAMP	IV	IRRIGATION VALVE	RES	RESIDENTIAL	VPI	VERTICAL POINT OF INTERSECTION
CS	COTTON SPINDLE	JP	JOINT POLE	RET	RETAINING	W/B	WEST BOUND
CSP	CORRUGATED STEEL PIPE	JT	JOINT	RG	RUBBER GASKET	WM	WATER METER
CSPA	CORRUGATED STEEL PIPE ARCH	LBS	POUNDS	RLG	ROCK LINED GUTTER	WP	WEAKENED PLANE
CA TV	CABLE TELEVISION	LF	LINEAR FOOT	RR	RAILROAD	WR	WHEELCHAIR RAMP
CULV	CULVERT	LOC	LOCATION	RT	RIGHT	WSE	WATER SURFACE ELEVATION
CY (CU YD)	CUBIC YARD(S)	LOL	LAYOUT LINE	RTE	ROUTE	WV	WATER VALVE
DI	DRAINAGE INLET	LP	LIMIT OF PAYMENT	RW	RETAINING WALL	WW	WINGWALL

CONSTRUCTION SYMBOLS

- A — TYPE "A" CURB
- B3 — TYPE "B3" CURB
- FA — TYPE "FA" CURB
- CE — FA CURB EXTENSION
- CS — COMMERCIAL SIDEWALK
- RD — RESIDENTIAL SIDEWALK
- AS STA W — ADJACENT RES SIDEWALK
- HW STA D — CONCRETE HOUSEWALK
- VG STA D — VALLEY GUTTER
- MB STA — MAIL BOX
- W STA D — CONCRETE DRIVEWAY
- W STA D S° — AC DRIVEWAY
- W STA D S° — DIRT DRIVEWAY
- W STA D — MODIFY CONC DRIVEWAY
- "W" — DENOTES WIDTH
- "D" — DENOTES MATCH DISTANCE
- "S°" — DENOTES SKEW ANGLE
- DI TC STA — DRAINAGE INLET
- DO TC STA — DRAINAGE OUTLET
- MH STA OFFSET — INSTALL MANHOLE
- WV STA OFFSET — INSTALL WATER VALVE
- MH — ADJUST MANHOLE
- AV STA OFFSET — ADJUST AIR RELEASE VALVE
- WV — ADJUST WATER VALVE
- DD — 2" AC DEPRESSED DIKE
- ID — 4" AC INTERMEDIATE DIKE
- D — 6" AC DIKE
- R — RADIUS
- "R" — DENOTES RADIUS IN FEET
- SM — SURVEY MONUMENT
- CC — CONCRETE COLLAR
- GM — GRADE MATCH
- SC — SAW CUT
- OD STA L — OVERSIDE DRAIN
- S — MISC TRAFFIC SIGN
- SS — STOP SIGN
- MB — MAIL BOX
- "L" — DENOTES LENGTH IN FEET
- SECTION CORNER
- MA — PLACE AC , MISC AREA
- DIRECTION OF FLOW
- GRADE TO FLOW
- CHAIN LINK FENCE
- WIRE FENCE
- DAYLIGHT LIMIT
- L — GP AND LP ROADWAY EXC
- X SHEET NO. / X DWG. NO. — REFERENCE TO STATE STANDARD PLAN DETAIL
- X SHEET NO. / X DWG. NO. — REFERENCE TO DETAIL ON DWG. OR DETAIL TITLE
- X SHEET NO. / X DWG. NO. — SECTION CUT
- INSTALL DETECTABLE WARNING SURFACE PER CALTRANS STANDARD PLAN A88A
- REMOVE TREE

EXISTING IMPROVEMENTS

- A — TYPE "A" CURB
- B3 — TYPE "B3" CURB
- FA — TYPE "FA" CURB
- CS — COMM SIDEWALK
- SS — ROADSIDE SIGN
- RS — RES SIDEWALK
- VG — VALLEY GUTTER
- SM — SURVEY MON
- MB — MAIL BOX
- S — STOP SIGN
- WIRE FENCE
- CHAIN LINK FENCE
- METAL FENCE
- WOOD FENCE
- PVC FENCE
- MISC LANDSCAPING

UTILITY NOTES

1. LOCATIONS OF EXISTING UNDERGROUND FACILITIES ARE APPROXIMATE EXACT DEPTH AND LOCATIONS ARE UNKNOWN. FIELD LOCATE PRIOR TO THE START OF CONSTRUCTION.

CALL UNDERGROUND SERVICE ALERT (USA) 811

UTILITY SYMBOLS

- STAND PIPE
- IRR UG PIPE FLOW
- IRR UG PIPE CAPPED
- IRR VALVE SCREWGATE
- IRR TOP GATE VALVE
- IRR PIPE 12" VERTICAL
- VENT PIPE
- IRR VALVE - BUBBLER
- IRR VALVE, DRIP SYSTEM
- IRR PIPE 4" VERT OUTLET
- WATER WELL
- WATER WELL PUMP
- WATER STORAGE TANK
- FIRE HYDRANT
- IRR 2"-4" PIPE RISER
- HB HOSE BIB
- SD MH-STORM DRAIN
- E MH MH-ELECTRICAL
- FO MH MH-FO/CABLE
- G MH MH-GAS
- S MH MH-SANITARY SWR
- T MH MH-TELEPHONE
- W MH MH-WATER
- EM ELEC METER
- ELECTRIC VAULT
- CHRISTY BOX
- TELEPHONE VAULT
- GM GAS METER
- GV GAS VALVE
- GAS VAULT
- GM WATER METER
- WV WATER VALVE
- C — UG CABLE
- D — UG STORM DRAIN LINE
- E — UG ELECTRIC LINE
- FO — UG FIBER OPTIC
- G — UG GAS LINE
- S — UG SANITARY SEWER
- T — UG TELEPHONE LINE
- W — UG WATER LINE
- OHE — OVERHEAD ELEC LINE
- OHT — OVERHEAD TELE LINE
- GF MH MH-GASOLINE FILLER
- GASOLINE VENT PIPE
- GASOLINE PUMP
- CO CLEAN OUT
- BACKFLOW PREVENTER
- SPRINKLER
- STREET LIGHT POLE
- EXISTING SIGNAL POLE
- STORM DRAIN DROP INLET
- STORM DRAIN GRATE
- STEEL DRAIN PIPE
- DOWN DRAIN
- C WARNING SIGN
- D WARNING SIGN
- E WARNING SIGN
- FO WARNING SIGN
- G WARNING SIGN
- S WARNING SIGN
- T WARNING SIGN
- W WARNING SIGN
- ELECTRIC PULL BOX
- PT PEDESTAL-TELEPHONE

EXISTING

- TELEPHONE POLE
- POWER POLE
- JOINT POLE
- JOINT TRANSFORMER POLE
- TRANSFORMER POLE
- GUY POLE
- GUY WIRE

	DATE	RECORD DRAWING	DATE
DESIGNED: EB	07/07/26	RESIDENT ENGINEER	
DRAWN: CM	07/07/26		
CHECKED: GG	07/07/26		

FOR RIGHT OF WAY DATA AND ACCURATE ACCESS DETERMINATION, SEE DOCUMENTS IN THE DEPARTMENT OF PUBLIC WORKS AND PLANNING.

SCALE

REGISTERED PROFESSIONAL ENGINEER — No. 70950 Exp.6/30/27 — CIVIL — STATE OF CALIFORNIA

Dewberry
DEWBERRY ENGINEERING INC.
575 EAST LOCUST AVENUE SUITE 204
FRESNO, CA 93720

PROJECT

TRAVERS CREEK BRIDGE ON MANNING AVENUE

ROAD NO. S0900 BRIDGE NO. 42C-0687

THE COUNTY OF FRESNO 1856

DEPARTMENT OF PUBLIC WORKS AND PLANNING

LEGEND SHEET

DRAWING NO. 11256 SHEET NO. LS-1 TOTAL 62

NOTES:

1. DIMENSIONS OF THE STRUCTURAL SECTIONS ARE SUBJECT TO TOLERANCES SPECIFIED IN THE STANDARD SPECIFICATIONS.
2. SUBGRADE SLOPE TO BE THE SAME AS TYPICAL SURFACE SLOPE UNLESS OTHERWISE NOTED.
3. SEE LAYOUT SHEETS FOR REMOVALS, TRANSITIONS, MIDWEST GUARDRAIL SYSTEM (MGS), FENCE, DIKE AND SWALE LOCATIONS.

TYPICAL PAVEMENT STRUCTURE SECTIONS

1 — 6" HMA (TYPE A, 3/4")
18" CLASS 2 AB
6" NATIVE MATERIAL (95% R.C.)*

*EXTEND 6" NATIVE MATERIAL (95% R.C.) WHERE HMA DIKE IS PLACED

2 — GRIND AC PAVEMENT 2" Max
2" HMA (TYPE A, 3/4") OVERLAY

3 — 6" CLASS 2 AB
6" NATIVE MATERIAL (95% R.C.)

DESIGN DESIGNATION

ROADWAY CLASSIFICATION	MAJOR COLLECTOR
DESIGN SPEED	65 MPH
ADT (2011)	6300
TRAFFIC INDEX	9

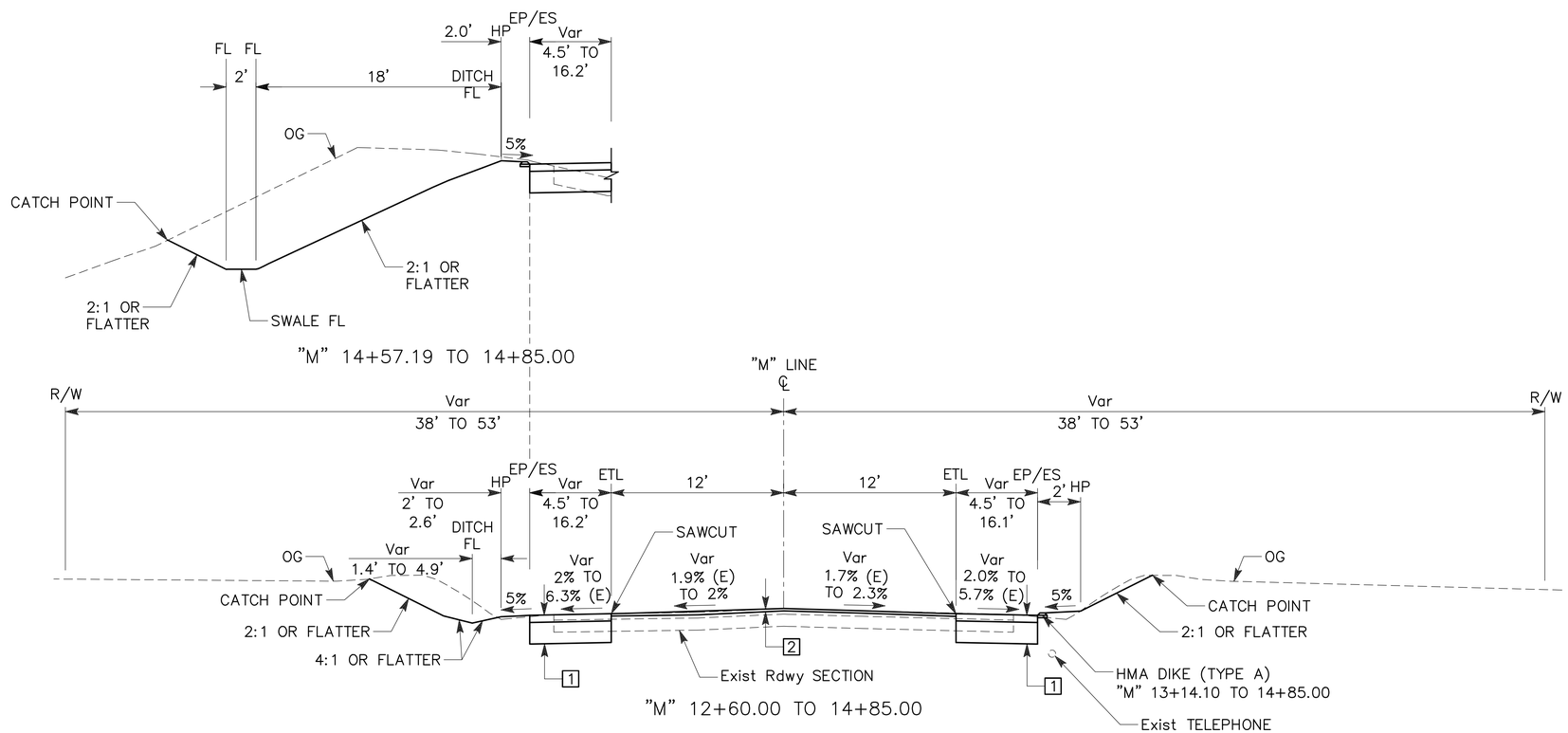

MANNING AVENUE

	DATE	RECORD DRAWING	
DESIGNED: EB	07/07/26	RESIDENT ENGINEER	DATE
DRAWN: CM	07/07/26		
CHECKED: GG	07/07/26		

FOR RIGHT OF WAY DATA AND ACCURATE ACCESS DETERMINATION, SEE DOCUMENTS IN THE DEPARTMENT OF PUBLIC WORKS AND PLANNING.

SCALE: NO SCALE

REGISTERED PROFESSIONAL ENGINEER No. 70950 Exp.6/30/27 CIVIL STATE OF CALIFORNIA

Dewberry
DEWBERRY ENGINEERING INC.
575 EAST LOCUST AVENUE SUITE 204
FRESNO, CA 93720

PROJECT: TRAVERS CREEK BRIDGE ON MANNING AVENUE

ROAD NO. S0900 BRIDGE NO. 42C-0687

THE COUNTY OF FRESNO 1856

DEPARTMENT OF PUBLIC WORKS AND PLANNING

TYPICAL CROSS SECTIONS

DRAWING NO. 11256 SHEET NO. X-1 TOTAL 62

NOTES:

1. DIMENSIONS OF THE STRUCTURAL SECTIONS ARE SUBJECT TO TOLERANCES SPECIFIED IN THE STANDARD SPECIFICATIONS.
2. SUBGRADE SLOPE TO BE THE SAME AS TYPICAL SURFACE SLOPE UNLESS OTHERWISE NOTED.
3. SEE LAYOUT SHEETS FOR REMOVALS, TRANSITIONS, MIDWEST GUARDRAIL SYSTEM (MGS), FENCE, DIKE AND SWALE LOCATIONS.

TYPICAL PAVEMENT STRUCTURE SECTIONS

1 — 6" HMA (TYPE A, 3/4")
18" CLASS 2 AB
6" NATIVE MATERIAL (95% R.C.)*

*EXTEND 6" NATIVE MATERIAL (95% R.C.) WHERE HMA DIKE IS PLACED

2 — GRIND AC PAVEMENT 2" Max
2" HMA (TYPE A, 3/4") OVERLAY

3 — 6" CLASS 2 AB
6" NATIVE MATERIAL (95% R.C.)

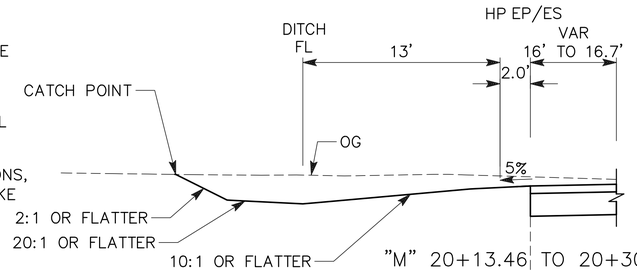

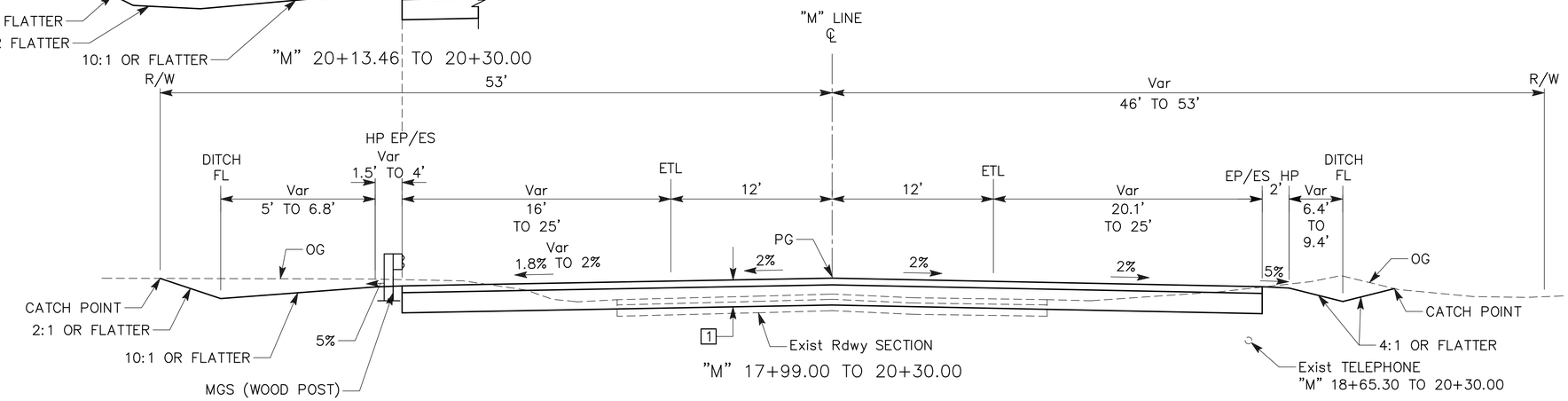

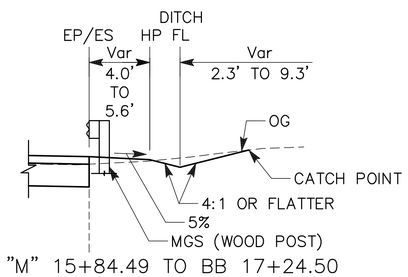

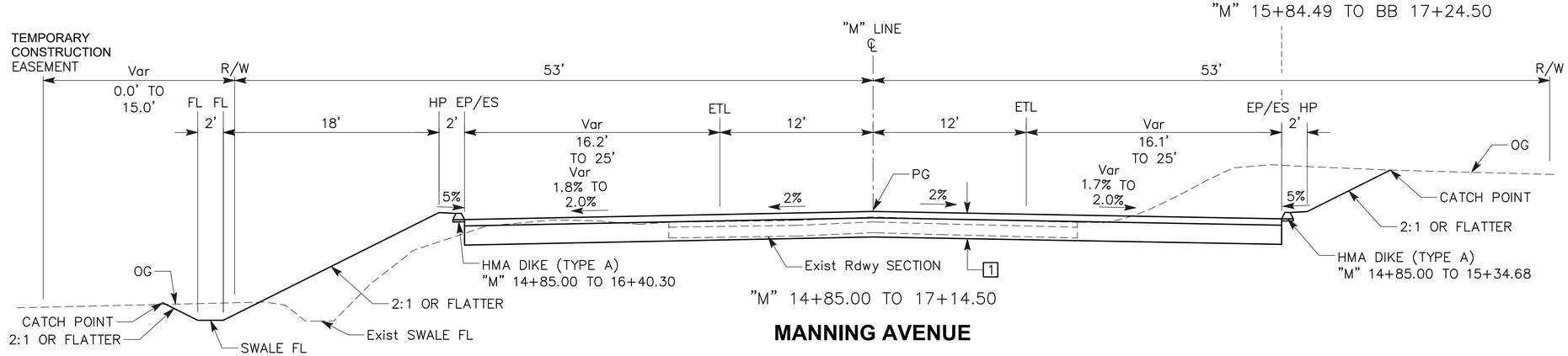

MANNING AVENUE

	DATE	RECORD DRAWING		SCALE
DESIGNED: EB	07/07/26	RESIDENT ENGINEER	DATE	NO SCALE
DRAWN: CM	07/07/26			
CHECKED: GG	07/07/26			

FOR RIGHT OF WAY DATA AND ACCURATE ACCESS DETERMINATION, SEE DOCUMENTS IN THE DEPARTMENT OF PUBLIC WORKS AND PLANNING.

REGISTERED PROFESSIONAL ENGINEER No. 70950 Exp.6/30/27 CIVIL STATE OF CALIFORNIA

Dewberry
DEWBERRY ENGINEERING INC.
575 EAST LOCUST AVENUE SUITE 204
FRESNO, CA 93720

PROJECT
TRAVERS CREEK BRIDGE ON MANNING AVENUE
ROAD NO. S0900 BRIDGE NO. 42C-0687

THE COUNTY OF FRESNO 1856

DEPARTMENT OF PUBLIC WORKS AND PLANNING
TYPICAL CROSS SECTIONS
DRAWING NO. 11256 SHEET NO. X-2 TOTAL 62

NOTES:

1. DIMENSIONS OF THE STRUCTURAL SECTIONS ARE SUBJECT TO TOLERANCES SPECIFIED IN THE STANDARD SPECIFICATIONS.
2. SUBGRADE SLOPE TO BE THE SAME AS TYPICAL SURFACE SLOPE UNLESS OTHERWISE NOTED.
3. SEE LAYOUT SHEETS FOR REMOVALS, TRANSITIONS, MIDWEST GUARDRAIL SYSTEM (MGS), FENCE, DIKE AND SWALE LOCATIONS.

TYPICAL PAVEMENT STRUCTURE SECTIONS

1 — 6" HMA (TYPE A, 3/4")
18" CLASS 2 AB
6" NATIVE MATERIAL (95% R.C.)*

*EXTEND 6" NATIVE MATERIAL (95% R.C.) WHERE HMA DIKE IS PLACED

2 — GRIND AC PAVEMENT 2" Max
2" HMA (TYPE A, 3/4") OVERLAY

3 — 6" CLASS 2 AB
6" NATIVE MATERIAL (95% R.C.)

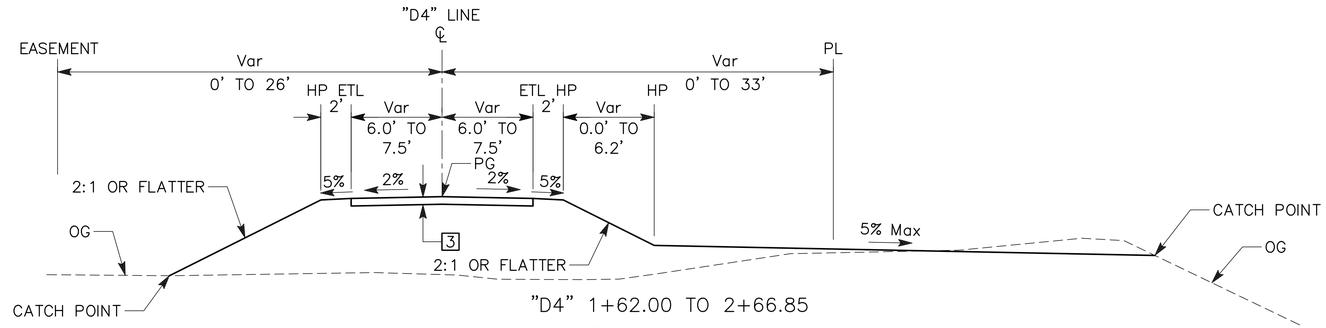

DRIVEWAY 4

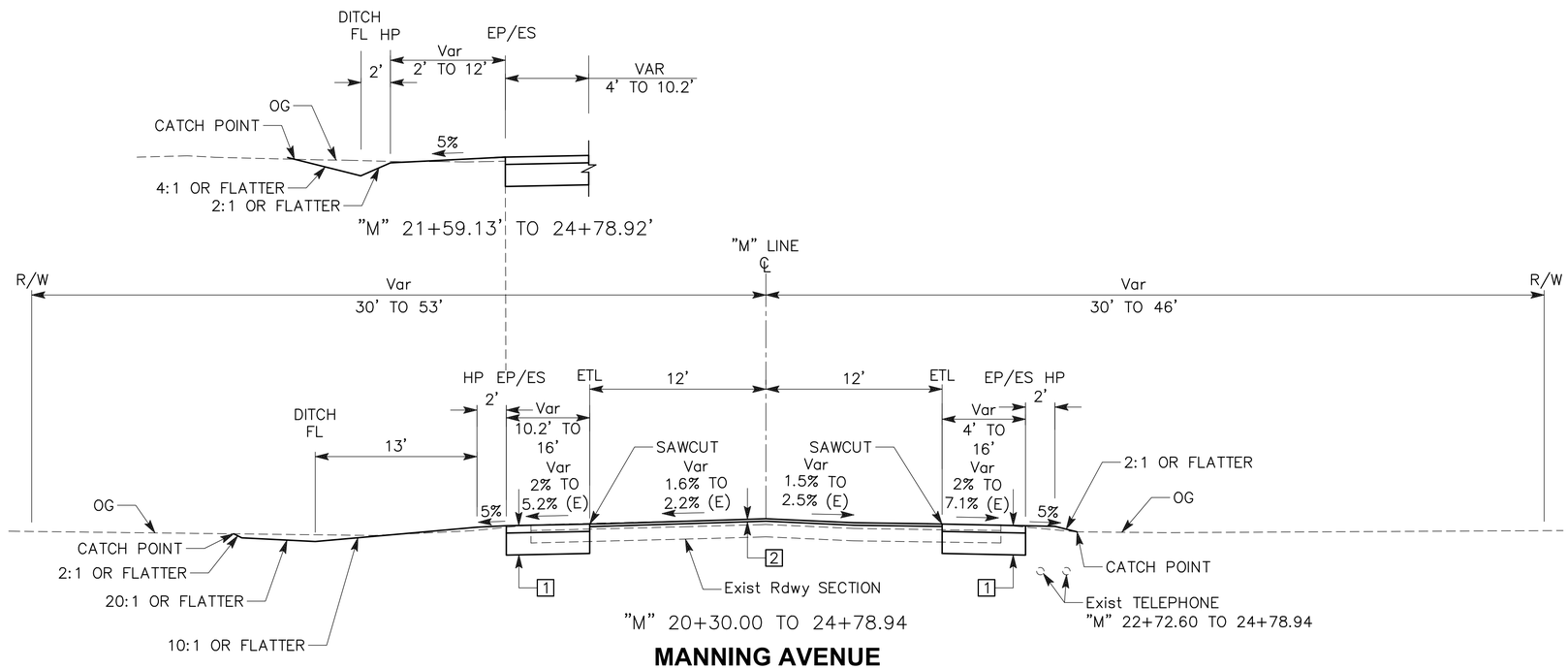

MANNING AVENUE

	DATE	RECORD DRAWING		SCALE		PROJECT		DEPARTMENT OF PUBLIC WORKS AND PLANNING
DESIGNED: EB	07/07/26	RESIDENT ENGINEER	DATE	NO SCALE	Dewberry DEWBERRY ENGINEERING INC. 575 EAST LOCUST AVENUE SUITE 204 FRESNO, CA 93720 REGISTERED PROFESSIONAL ENGINEER No. 70950 Exp.6/30/27 CIVIL STATE OF CALIFORNIA	TRAVERS CREEK BRIDGE ON MANNING AVENUE	THE COUNTY OF FRESNO 1856	TYPICAL CROSS SECTIONS
DRAWN: CM	07/07/26							
CHECKED: GG	07/07/26					ROAD NO. S0900 BRIDGE NO. 42C-0687		DRAWING NO. 11256 SHEET NO. X-3 TOTAL 62

FOR RIGHT OF WAY DATA AND ACCURATE ACCESS DETERMINATION, SEE DOCUMENTS IN THE DEPARTMENT OF PUBLIC WORKS AND PLANNING.

NOTES:

1. FOR COMPLETE PROJECT CONTROL DATA, SEE THE SURVEY RECORDS ON FILE FROM THE RECORDERS OFFICE OF THE COUNTY OF FRESNO.

2. BASIS OF BEARINGS AND COORDINATES:

   THE NORTH LINE OF THE NORTHWEST QUARTER OF SECTION 30, T. 15 S., R. 24 E., MOUNT DIABLO BASELINE AND MERIDIAN HAS AN ASSUMED BEARING OF N 90° 00' 00" E.

   LOCAL AND ASSUMED COORDINATES.

3. BASIS OF ELEVATIONS:

   COUNTY OF FRESNO BM LO 119
   FRESNO COUNTY BRASS CAP STAMPED LO 119, LOCATED ON A CONCRETE HEADWALL, 15.5' SOUTH OF MANNING AVENUE, EAST OF TRAVERS CREEK ELEV. = 358.08 NAVD 88 DATUM

LEGEND:

SURVEY CONTROL POINT

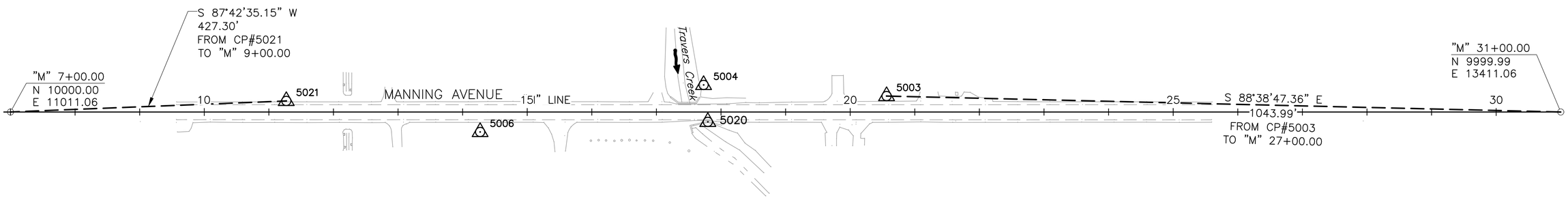

CONTROL FOR DESIGN AND CONSTRUCTION

CONTROL POINT	NORTHING	EASTING	ELEVATION	DESCRIPTION
5003	10024.65	12367.36	356.79	"FD FC 5/8" RBR
5004	10041.87	12084.05	357.16	"FD FC 5/8" RBR
5006	9969.10	11738.10	363.56	"FD FC 5/8" RBR
5020	9984.71	12090.66	358.08	FD BM LO119
5021	10017.07	11438.02	358.07	SET 80/D

APPROVED FOR PROJECT CONTROL INFORMATION ONLY

	DATE	RECORD DRAWING	
DESIGNED: EB	07/07/26	RESIDENT ENGINEER	DATE
DRAWN: CM	07/07/26		
CHECKED: GG	07/07/26		

FOR RIGHT OF WAY DATA AND ACCURATE ACCESS DETERMINATION, SEE DOCUMENTS IN THE DEPARTMENT OF PUBLIC WORKS AND PLANNING.

SCALE: NO SCALE

REGISTERED PROFESSIONAL ENGINEER No. 70950 Exp.6/30/27 CIVIL STATE OF CALIFORNIA

Dewberry
DEWBERRY ENGINEERING INC.
575 EAST LOCUST AVENUE SUITE 204
FRESNO, CA 93720

PROJECT: TRAVERS CREEK BRIDGE ON MANNING AVENUE

ROAD NO. S0900 BRIDGE NO. 42C-0687

THE COUNTY OF FRESNO 1856

DEPARTMENT OF PUBLIC WORKS AND PLANNING

PROJECT CONTROL

DRAWING NO. 11256 SHEET NO. PC-1 TOTAL 62

NOTES:

1. FOR ACCURATE RIGHT-OF-WAY DATA, CONTACT COUNTY OFFICE.
2. ALL STATION/OFFSET CALLOUTS ARE TO THE EDGE OF PAVEMENT UNLESS OTHERWISE NOTED.
3. SEE CONSTRUCTION DETAILS FOR MGS, DRIVEWAY, AND DIKE TRANSITION INFORMATION.

LEGEND:

- CUT
- FILL
- EASEMENT
- TEMPORARY CONSTRUCTION PERMIT (TCP)
- EXISTING PROPERTY LINE
- R/W
- DITCH/SWALE FLOW LINE
- HMA GRIND AND OVERLAY
- REMOVE TREE

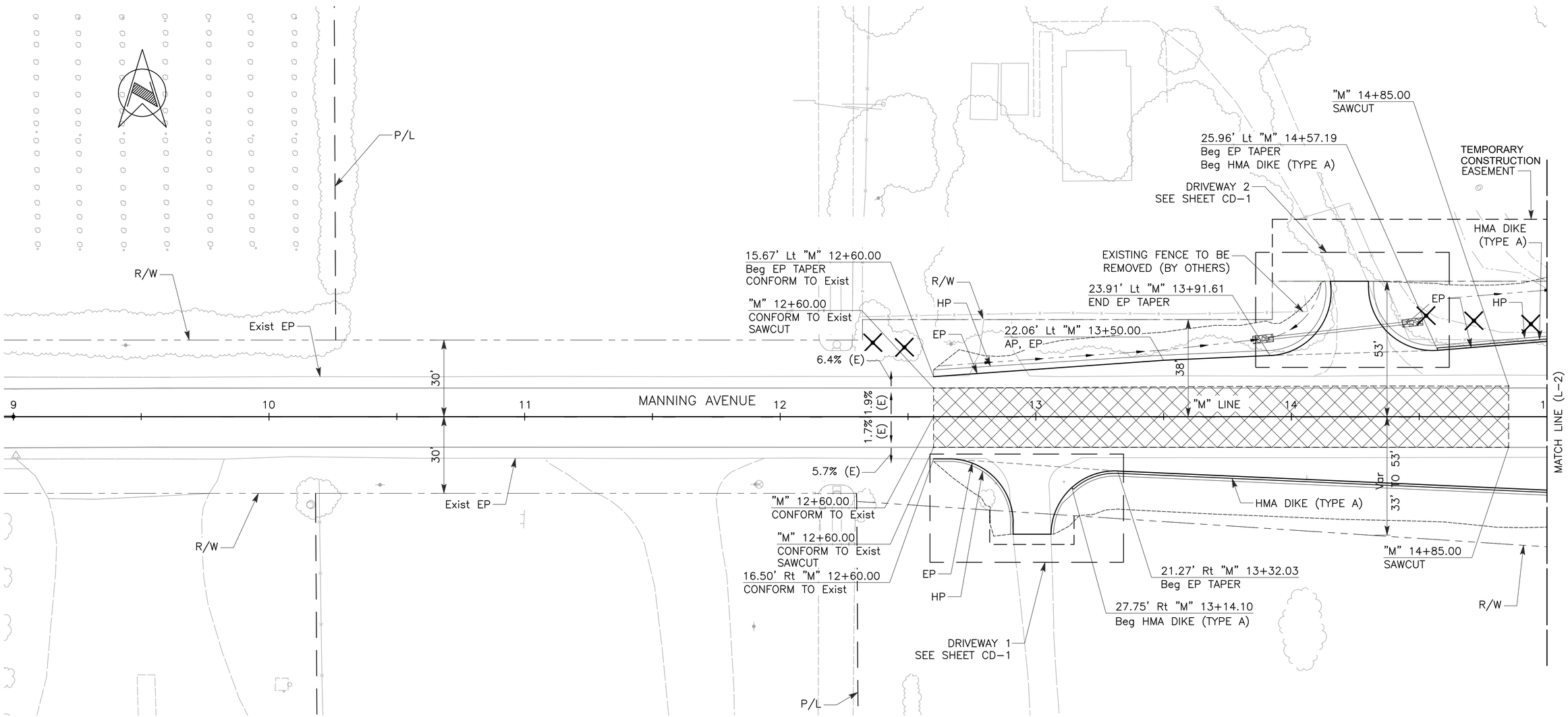

	DATE	RECORD DRAWING	
DESIGNED: EB	07/07/26	RESIDENT ENGINEER	DATE
DRAWN: CM	07/07/26		
CHECKED: GG	07/07/26		

FOR RIGHT OF WAY DATA AND ACCURATE ACCESS DETERMINATION, SEE DOCUMENTS IN THE DEPARTMENT OF PUBLIC WORKS AND PLANNING.

SCALE

HORIZ 0 20' 40'

REGISTERED PROFESSIONAL ENGINEER No. 70950 Exp. 6/30/27 CIVIL STATE OF CALIFORNIA

Dewberry

DEWBERRY ENGINEERING INC.
575 EAST LOCUST AVENUE SUITE 204
FRESNO, CA 93720

PROJECT

TRAVERS CREEK BRIDGE ON MANNING AVENUE

ROAD NO. S0900 BRIDGE NO. 42C-0687

THE COUNTY OF FRESNO 1856

DEPARTMENT OF PUBLIC WORKS AND PLANNING

LAYOUT

DRAWING NO. 11256 SHEET NO. L-1 TOTAL 62

NOTES:

1. FOR DRAINAGE INFORMATION, SEE DRAINAGE PLANS.

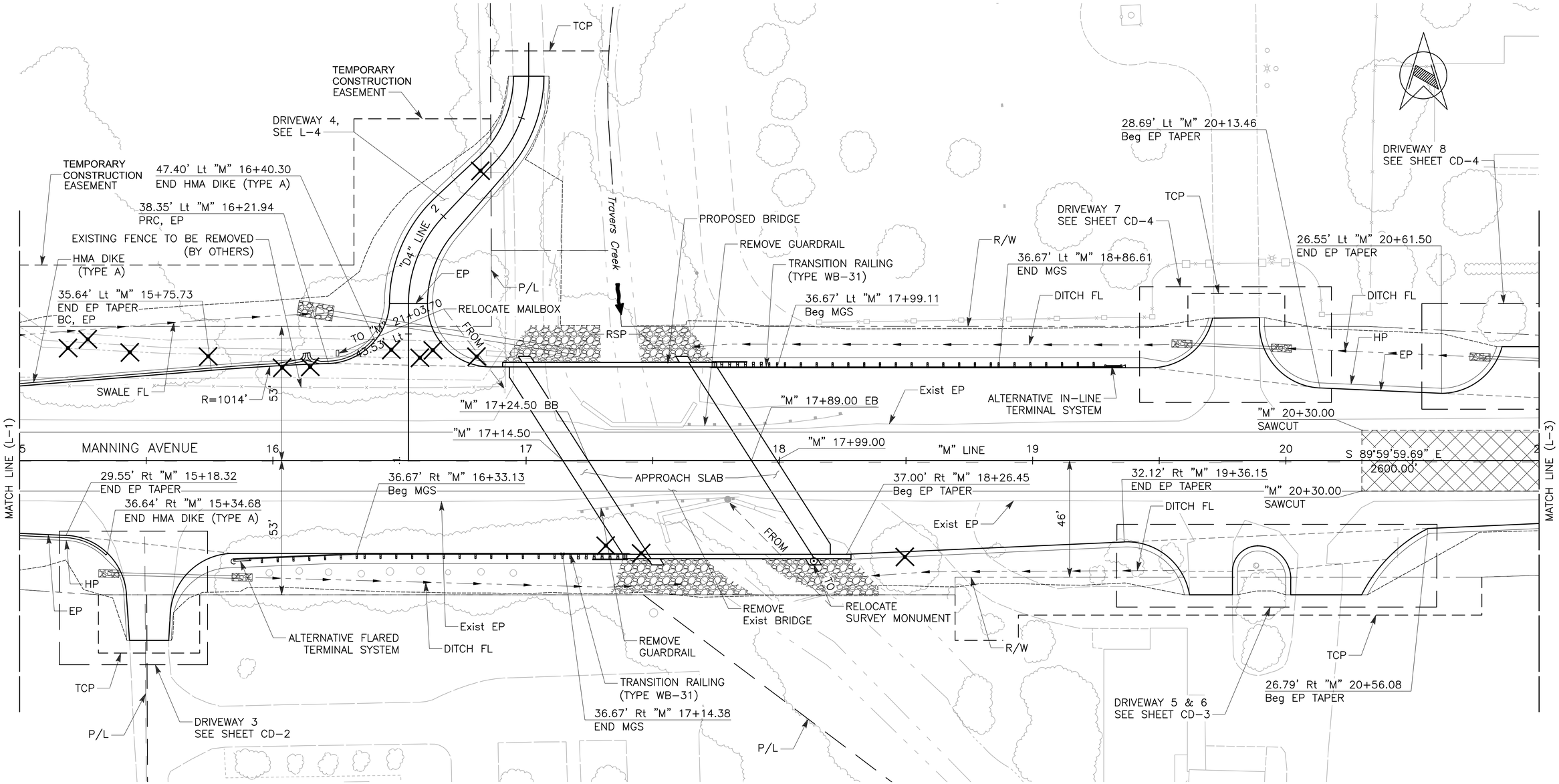

	DATE	RECORD DRAWING	
DESIGNED: EB	07/07/26	RESIDENT ENGINEER	DATE
DRAWN: CM	07/07/26		
CHECKED: GG	07/07/26		

FOR RIGHT OF WAY DATA AND ACCURATE ACCESS DETERMINATION, SEE DOCUMENTS IN THE DEPARTMENT OF PUBLIC WORKS AND PLANNING.

SCALE

HORIZ 0 20' 40'

REGISTERED PROFESSIONAL ENGINEER No. 70950 Exp.6/30/27 CIVIL STATE OF CALIFORNIA

Dewberry

DEWBERRY ENGINEERING INC.
575 EAST LOCUST AVENUE SUITE 204
FRESNO, CA 93720

PROJECT

TRAVERS CREEK BRIDGE ON MANNING AVENUE

ROAD NO. S0900 BRIDGE NO. 42C-0687

THE COUNTY OF FRESNO 1856

DEPARTMENT OF PUBLIC WORKS AND PLANNING

LAYOUT

DRAWING NO. 11256 SHEET NO. L-2 TOTAL 62

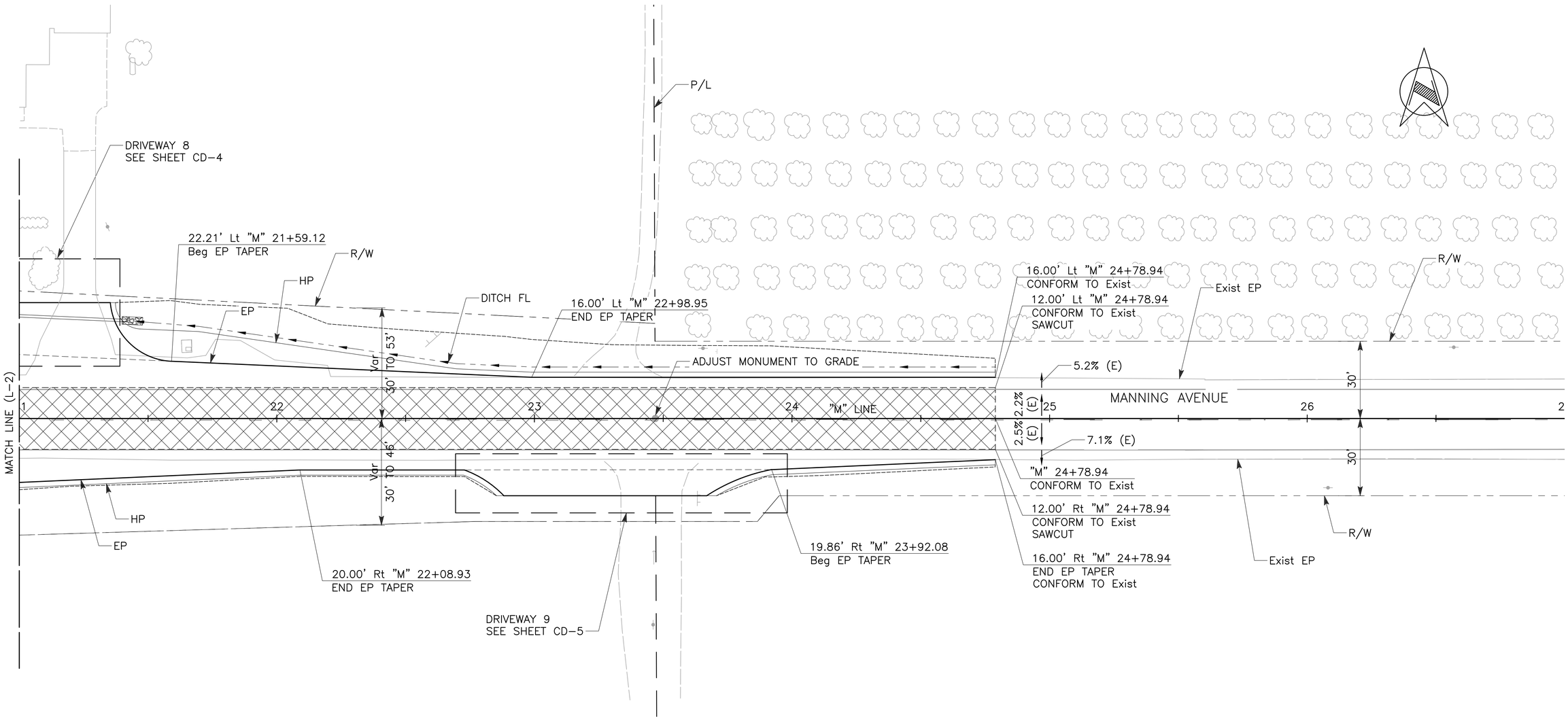

	DATE	RECORD DRAWING	
DESIGNED: EB	07/07/26	RESIDENT ENGINEER	DATE
DRAWN: CM	07/07/26		
CHECKED: GG	07/07/26		

FOR RIGHT OF WAY DATA AND ACCURATE ACCESS DETERMINATION, SEE DOCUMENTS IN THE DEPARTMENT OF PUBLIC WORKS AND PLANNING.

SCALE

HORIZ 0 20' 40'

REGISTERED PROFESSIONAL ENGINEER No. 70950 Exp.6/30/27 CIVIL STATE OF CALIFORNIA

Dewberry

DEWBERRY ENGINEERING INC.
575 EAST LOCUST AVENUE SUITE 204
FRESNO, CA 93720

PROJECT

TRAVERS CREEK BRIDGE ON MANNING AVENUE

ROAD NO. S0900 BRIDGE NO. 42C-0687

THE COUNTY OF FRESNO 1856

DEPARTMENT OF PUBLIC WORKS AND PLANNING

LAYOUT

DRAWING NO. 11256 SHEET NO. L-3 TOTAL 62

ALIGNMENT CURVE DATA				
No.	R	Δ	T	L
C1	50.00'	43°27'25"	19.93'	37.92'
C2	50.00'	43°27'25"	19.93'	37.92'

CURVE DATA				
No.	R	Δ	T	L
1	25.00'	86°05'28"	23.35'	37.56'
2	25.00'	89°59'55"	25.00'	39.27'
3	42.50'	40°53'31"	15.84'	30.33'
4	57.50'	45°08'01"	23.90'	45.29'
5	56.00'	40°53'31"	20.88'	39.97'
6	44.00'	46°59'27"	19.13'	36.09'

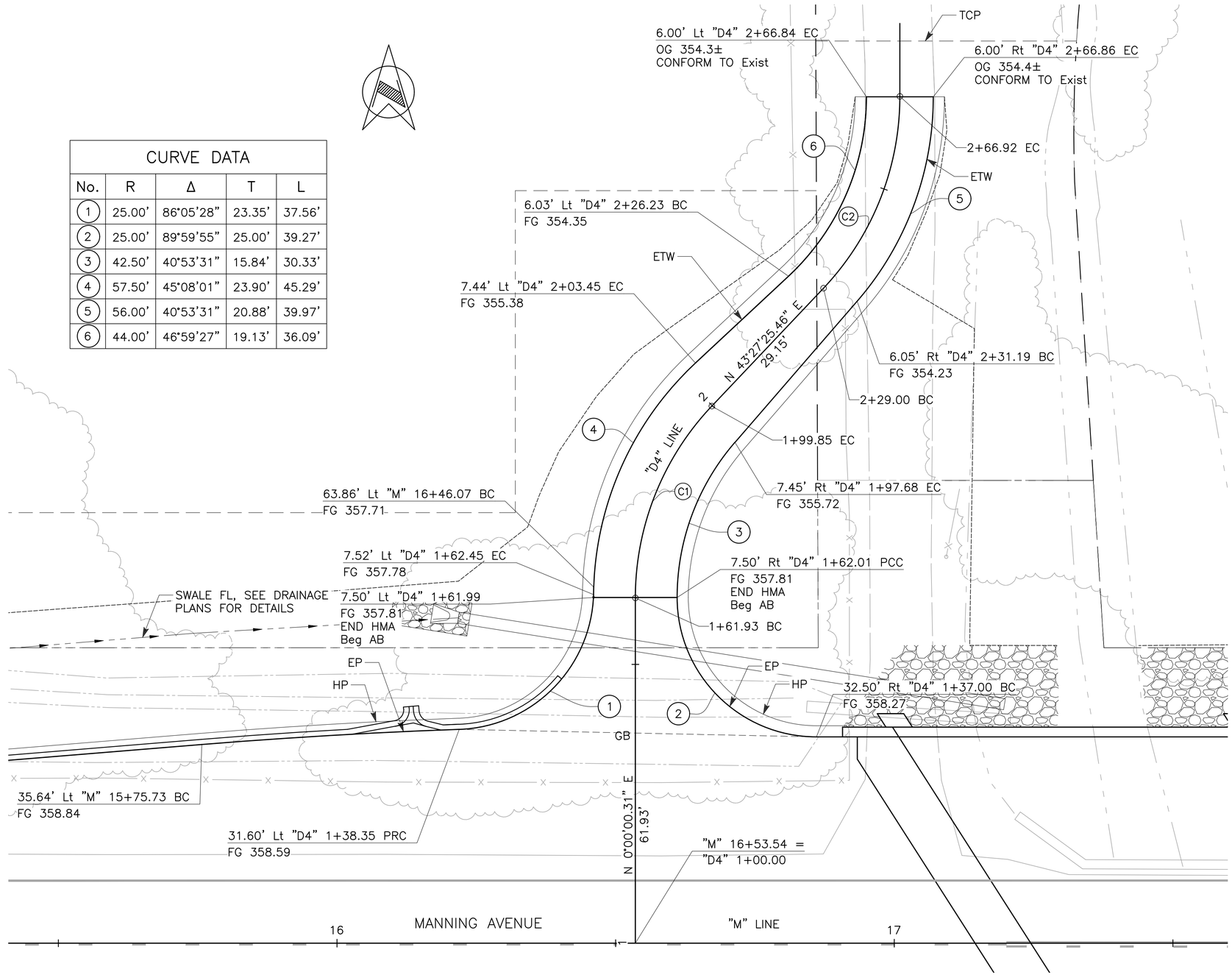

	DATE	RECORD DRAWING	
DESIGNED: EB	07/07/26	RESIDENT ENGINEER	DATE
DRAWN: CM	07/07/26		
CHECKED: GG	07/07/26		

FOR RIGHT OF WAY DATA AND ACCURATE ACCESS DETERMINATION, SEE DOCUMENTS IN THE DEPARTMENT OF PUBLIC WORKS AND PLANNING.

SCALE

HORIZ 0 10' 20'

REGISTERED PROFESSIONAL ENGINEER No. 70950 Exp.6/30/27 CIVIL STATE OF CALIFORNIA

Dewberry

DEWBERRY ENGINEERING INC.
575 EAST LOCUST AVENUE SUITE 204
FRESNO, CA 93720

PROJECT

TRAVERS CREEK BRIDGE ON
MANNING AVENUE

ROAD NO. S0900 BRIDGE NO. 42C-0687

THE COUNTY OF FRESNO 1856

DEPARTMENT OF PUBLIC WORKS AND PLANNING

LAYOUT

DRAWING NO. 11256 SHEET NO. L-4 TOTAL 62

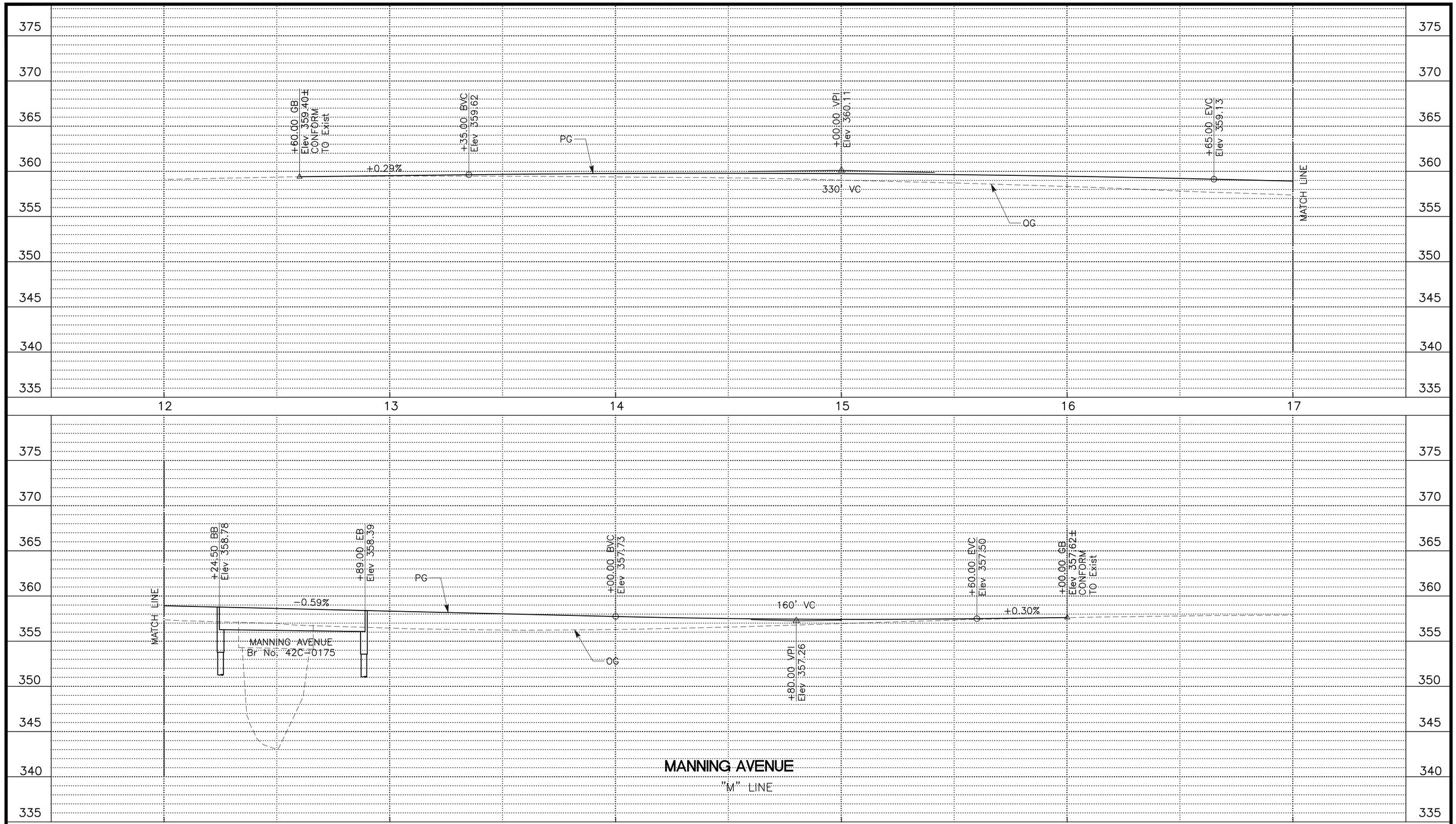

	DATE	RECORD DRAWING	
DESIGNED: EB	07/07/26	RESIDENT ENGINEER	DATE
DRAWN: CM	07/07/26		
CHECKED: GG	07/07/26		

FOR RIGHT OF WAY DATA AND ACCURATE ACCESS DETERMINATION, SEE DOCUMENTS IN THE DEPARTMENT OF PUBLIC WORKS AND PLANNING.

SCALE

HORIZ 0 20' 40'

VERT 0 5' 10'

REGISTERED PROFESSIONAL ENGINEER No. 70950 Exp.6/30/27 CIVIL STATE OF CALIFORNIA

Dewberry

DEWBERRY ENGINEERING INC.
575 EAST LOCUST AVENUE SUITE 204
FRESNO, CA 93720

PROJECT

TRAVERS CREEK BRIDGE ON MANNING AVENUE

ROAD NO. S0900 BRIDGE NO. 42C-0687

THE COUNTY OF FRESNO 1856

DEPARTMENT OF PUBLIC WORKS AND PLANNING

PROFILE

DRAWING NO. 11256 SHEET NO. P-1 TOTAL 62

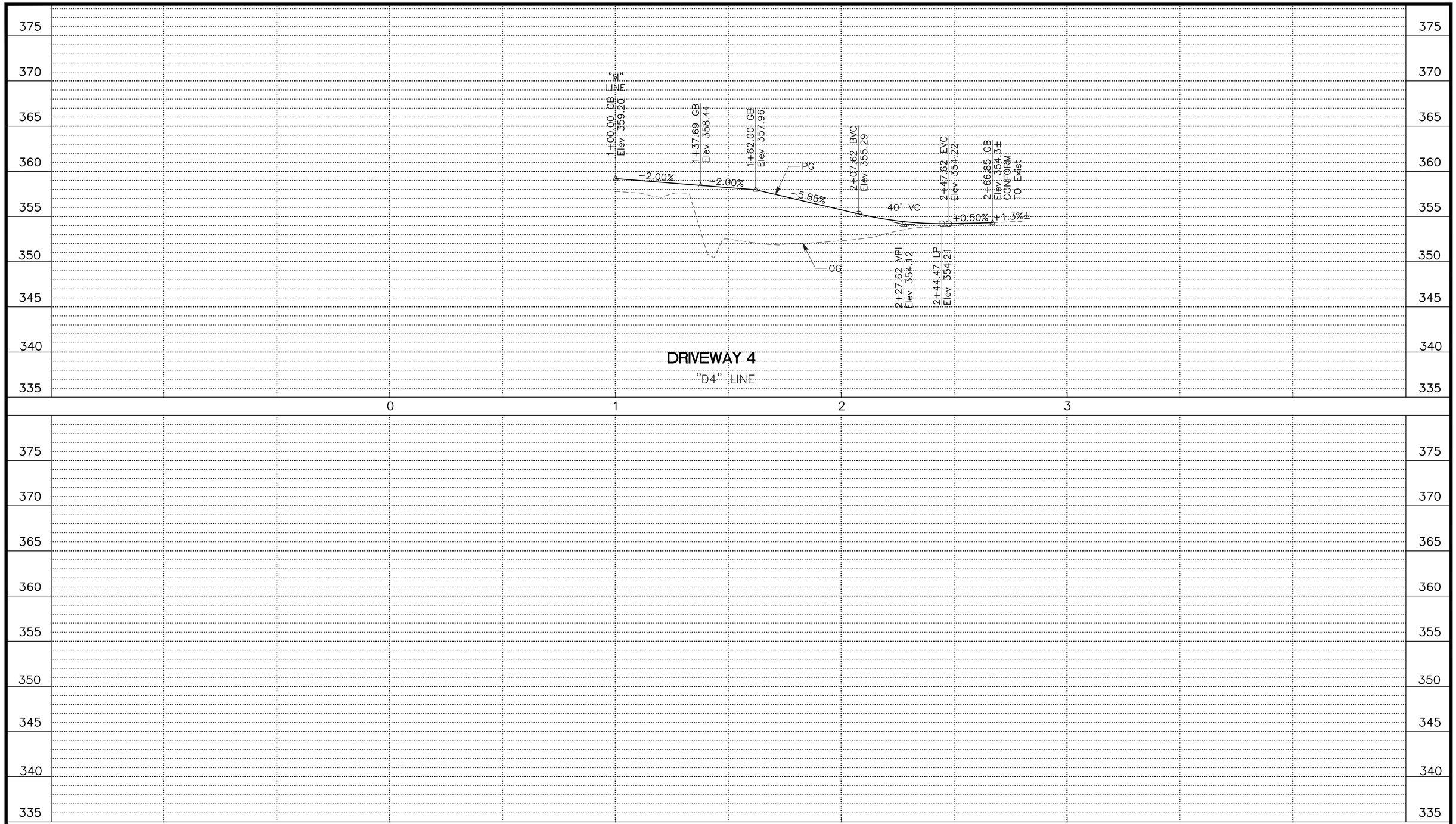

	DATE	RECORD DRAWING	
DESIGNED: EB	07/07/26	RESIDENT ENGINEER	DATE
DRAWN: CM	07/07/26		
CHECKED: GG	07/07/26		

FOR RIGHT OF WAY DATA AND ACCURATE ACCESS DETERMINATION, SEE DOCUMENTS IN THE DEPARTMENT OF PUBLIC WORKS AND PLANNING.

SCALE

HORIZ 0 20' 40'

VERT 0 5' 10'

REGISTERED PROFESSIONAL ENGINEER No. 70950 Exp. 6/30/27 CIVIL STATE OF CALIFORNIA

Dewberry

DEWBERRY ENGINEERING INC.
575 EAST LOCUST AVENUE SUITE 204
FRESNO, CA 93720

PROJECT

TRAVERS CREEK BRIDGE ON MANNING AVENUE

ROAD NO. S0900 BRIDGE NO. 42C-0687

THE COUNTY OF FRESNO 1856

DEPARTMENT OF PUBLIC WORKS AND PLANNING

PROFILE

DRAWING NO. 11256 SHEET NO. P-2 TOTAL 62

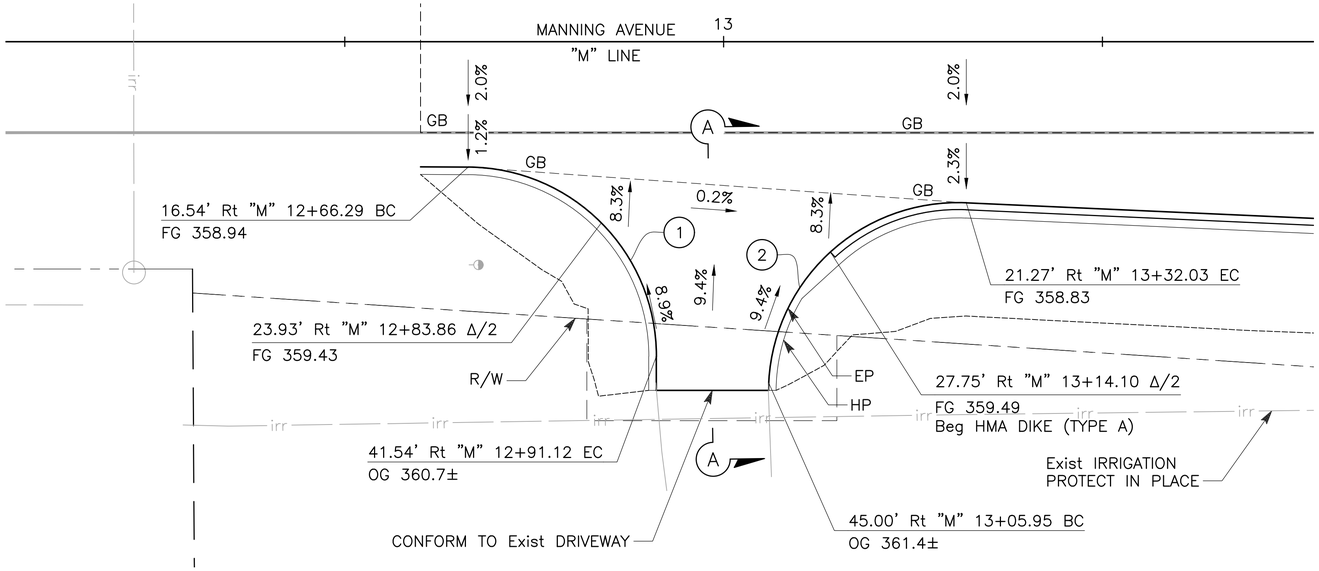

DRIVEWAY 1 DETAIL

SCALE: 1"=10'

CURVE DATA				
No.	R	Δ	T	L
1	25.00'	89°37'07"	24.83'	39.10'
2	25.00'	89°41'59"	24.87'	39.14'
3	25.00'	96°55'13"	28.22'	42.29'
4	25.00'	94°40'06"	27.12'	41.31'

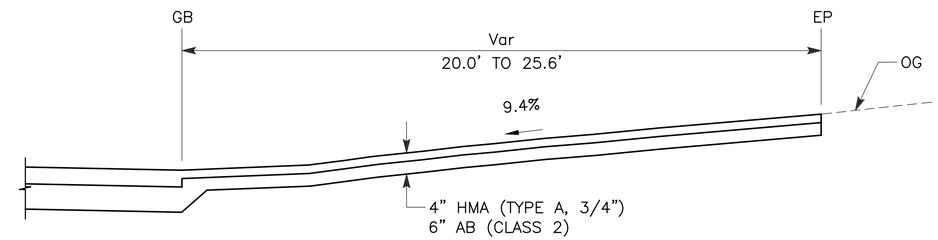

SECTION A-A

NO SCALE

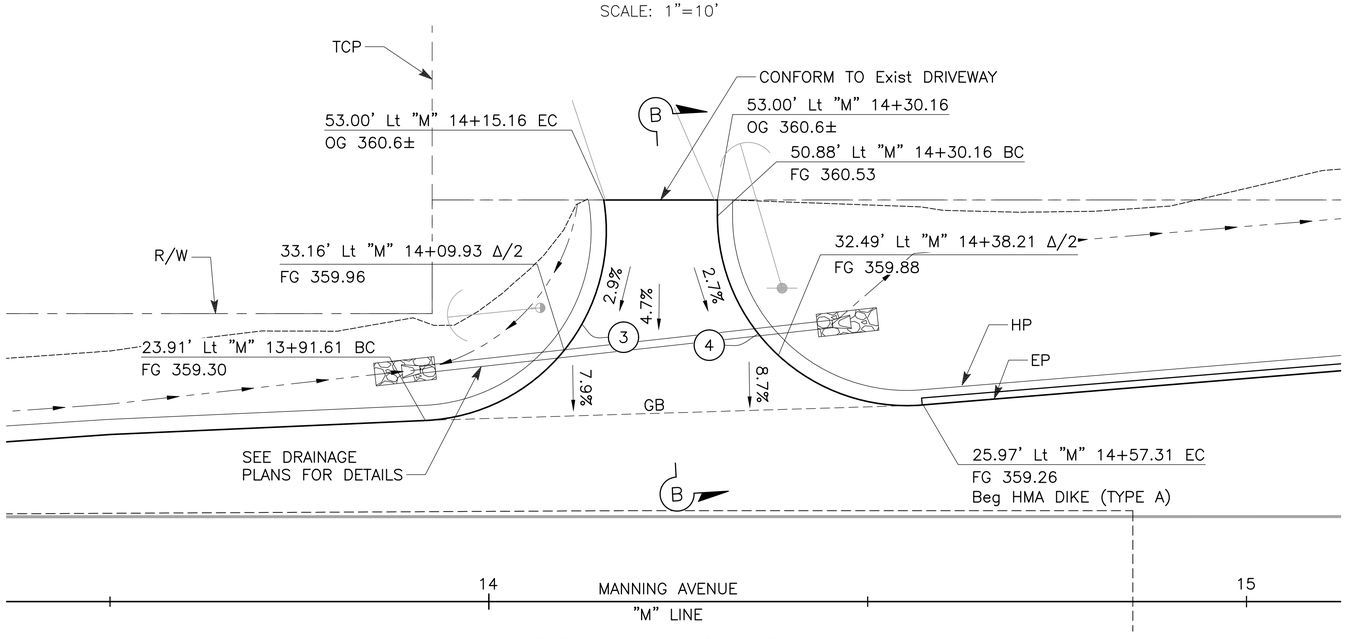

DRIVEWAY 2 DETAIL

SCALE: 1"=10'

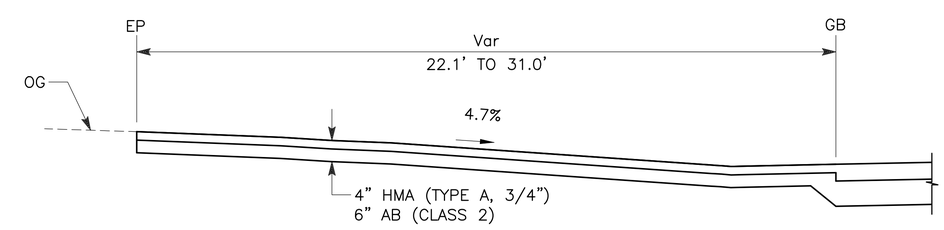

SECTION B-B

NO SCALE

	DATE	RECORD DRAWING	
DESIGNED: EB	07/07/26	RESIDENT ENGINEER	DATE
DRAWN: CM	07/07/26		
CHECKED: GG	07/07/26		

FOR RIGHT OF WAY DATA AND ACCURATE ACCESS DETERMINATION, SEE DOCUMENTS IN THE DEPARTMENT OF PUBLIC WORKS AND PLANNING.

SCALE

HORIZ 0 10' 20'

REGISTERED PROFESSIONAL ENGINEER No. 70950 Exp.6/30/27 CIVIL STATE OF CALIFORNIA

Dewberry

DEWBERRY ENGINEERING INC.
575 EAST LOCUST AVENUE SUITE 204
FRESNO, CA 93720

PROJECT

TRAVERS CREEK BRIDGE ON MANNING AVENUE

ROAD NO. S0900 BRIDGE NO. 42C-0687

THE COUNTY OF FRESNO 1856

DEPARTMENT OF PUBLIC WORKS AND PLANNING

CONSTRUCTION DETAILS

DRAWING NO. 11256 SHEET NO. CD-1 TOTAL 62

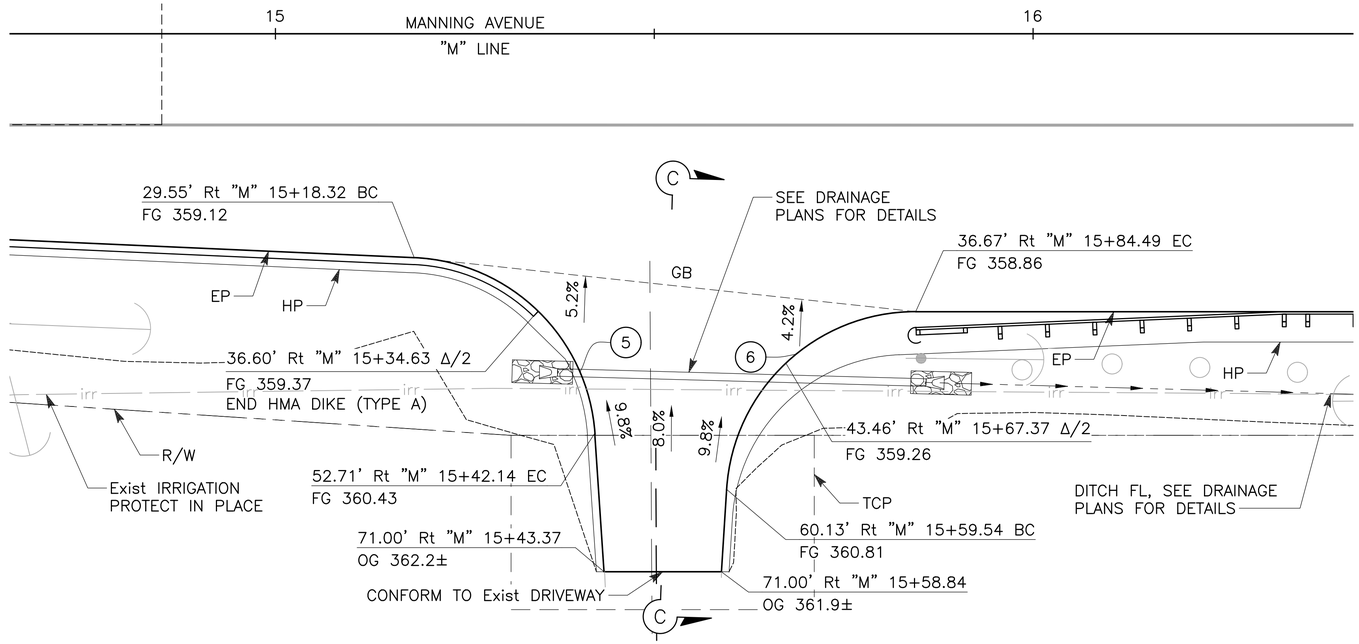

DRIVEWAY 3 DETAIL

SCALE: 1"=10'

CURVE DATA				
No.	R	Δ	T	L
5	25.00'	83°17'36"	22.23'	36.34'
6	25.00'	86°28'13"	23.51'	37.73'

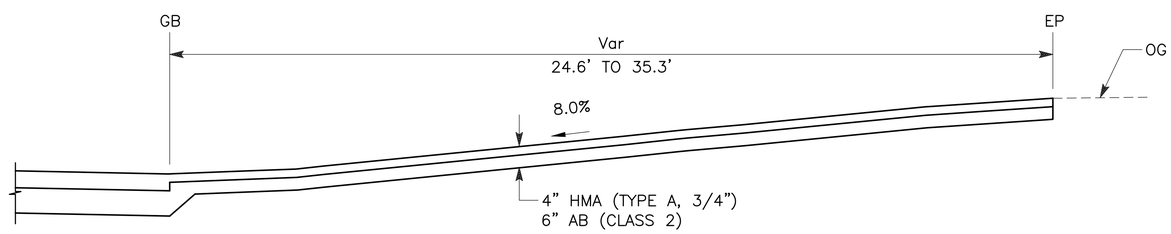

SECTION C-C

NO SCALE

	DATE	RECORD DRAWING	
DESIGNED: EB	07/07/26	RESIDENT ENGINEER	DATE
DRAWN: CM	07/07/26		
CHECKED: GG	07/07/26		

FOR RIGHT OF WAY DATA AND ACCURATE ACCESS DETERMINATION, SEE DOCUMENTS IN THE DEPARTMENT OF PUBLIC WORKS AND PLANNING.

SCALE

HORIZ 0 10' 20'

REGISTERED PROFESSIONAL ENGINEER No. 70950 Exp.6/30/27 CIVIL STATE OF CALIFORNIA

Dewberry

DEWBERRY ENGINEERING INC.
575 EAST LOCUST AVENUE SUITE 204
FRESNO, CA 93720

PROJECT

TRAVERS CREEK BRIDGE ON
MANNING AVENUE

ROAD NO. S0900 BRIDGE NO. 42C-0687

THE COUNTY OF FRESNO 1856

DEPARTMENT OF PUBLIC WORKS AND PLANNING

CONSTRUCTION DETAILS

DRAWING NO. 11256 SHEET NO. CD-2 TOTAL 62

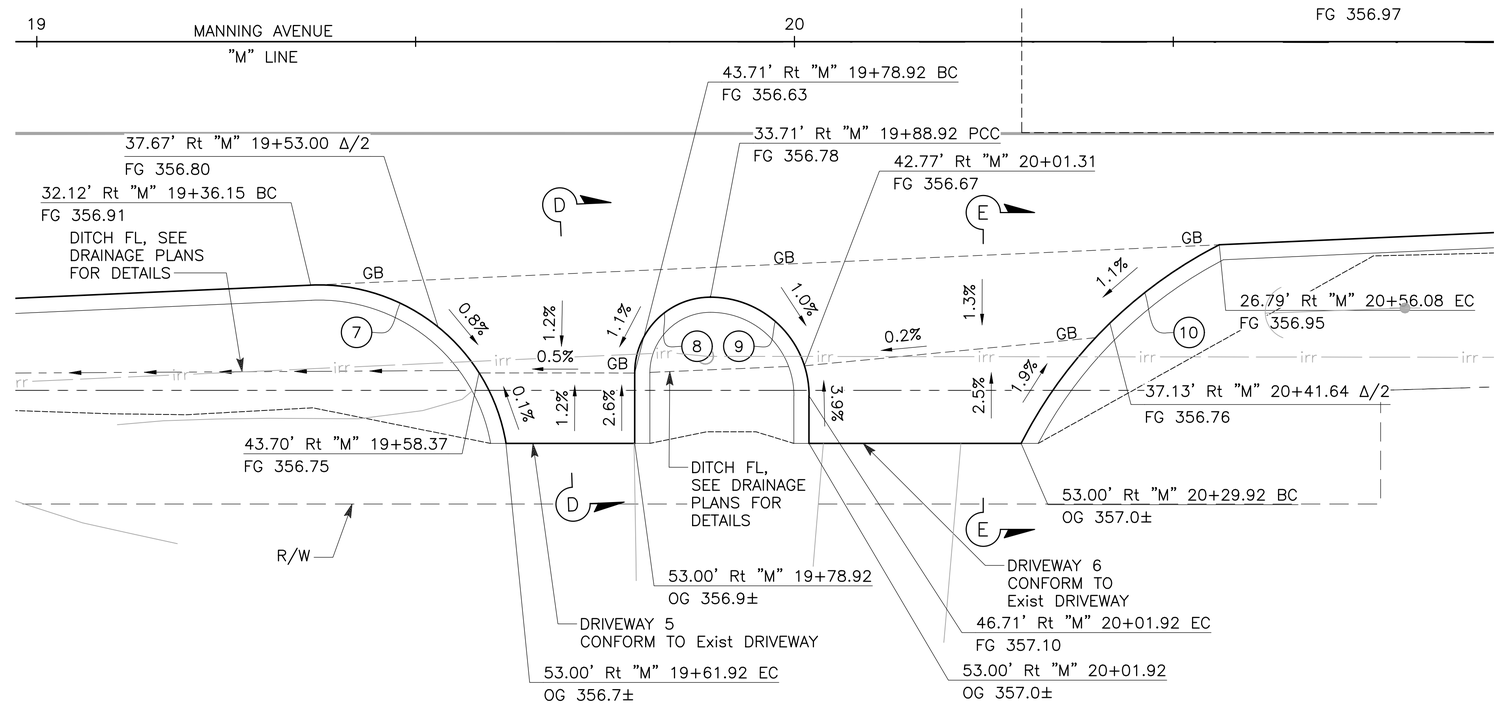

CURVE DATA				
No.	R	Δ	T	L
7	25.00'	83°05'47"	22.16'	36.26'
8	10.00'	90°00'00"	10.00'	15.71'
9	13.00'	90°00'00"	13.00'	20.42'
10	60.00'	35°56'33"	19.46'	37.64'

DRIVEWAY 5 & 6 DETAIL

SCALE: 1"=10'

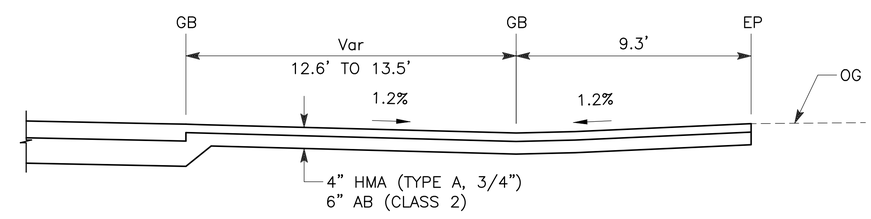

SECTION D-D

NO SCALE

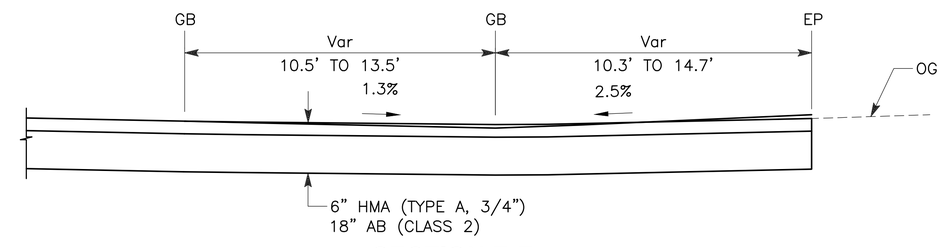

SECTION E-E

NO SCALE

	DATE	RECORD DRAWING	
DESIGNED: EB	07/07/26	RESIDENT ENGINEER	DATE
DRAWN: CM	07/07/26		
CHECKED: GG	07/07/26		

FOR RIGHT OF WAY DATA AND ACCURATE ACCESS DETERMINATION, SEE DOCUMENTS IN THE DEPARTMENT OF PUBLIC WORKS AND PLANNING.

SCALE

HORIZ 0 10' 20'

REGISTERED PROFESSIONAL ENGINEER No. 70950 Exp.6/30/27 CIVIL STATE OF CALIFORNIA

Dewberry

DEWBERRY ENGINEERING INC.
575 EAST LOCUST AVENUE SUITE 204
FRESNO, CA 93720

PROJECT

TRAVERS CREEK BRIDGE ON MANNING AVENUE

ROAD NO. S0900 BRIDGE NO. 42C-0687

THE COUNTY OF FRESNO 1856

DEPARTMENT OF PUBLIC WORKS AND PLANNING

CONSTRUCTION DETAILS

DRAWING NO. 11256 SHEET NO. CD-3 TOTAL 62

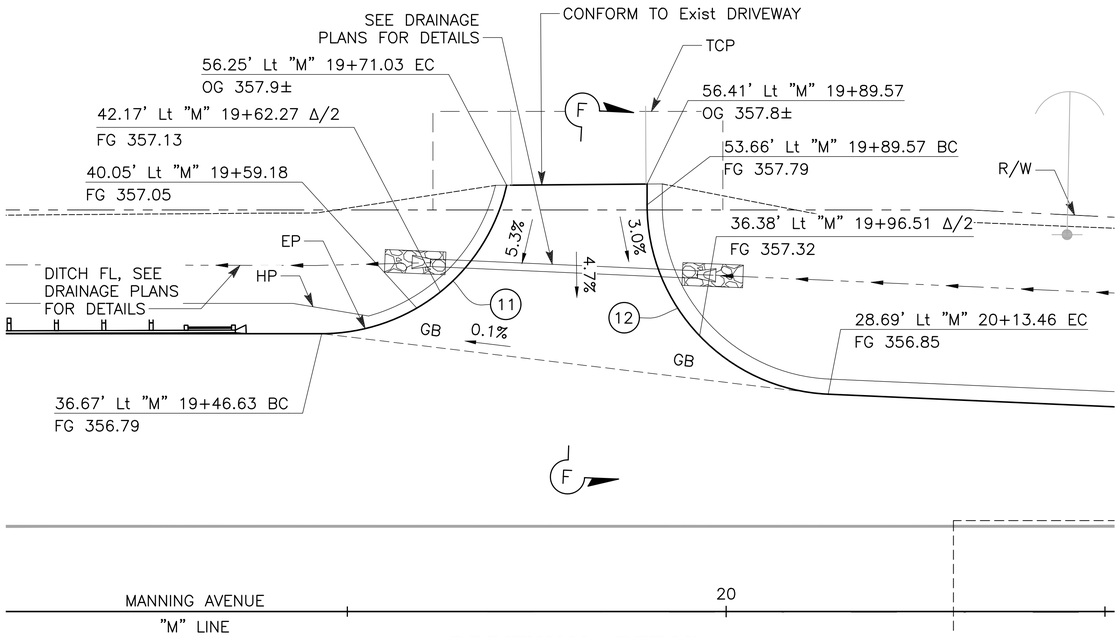

DRIVEWAY 7 DETAIL

SCALE: 1"=10'

CURVE DATA				
No.	R	Δ	T	L
11	25.00'	77°29'05"	20.06'	33.81'
12	25.00'	87°27'19"	23.91'	38.16'
13	25.00'	74°07'26"	18.88'	32.34'
14	25.00'	82°24'43"	21.89'	35.96'

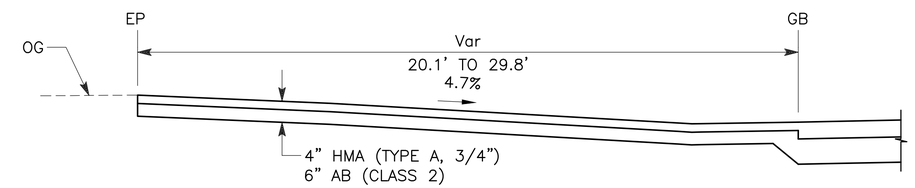

SECTION F-F

NO SCALE

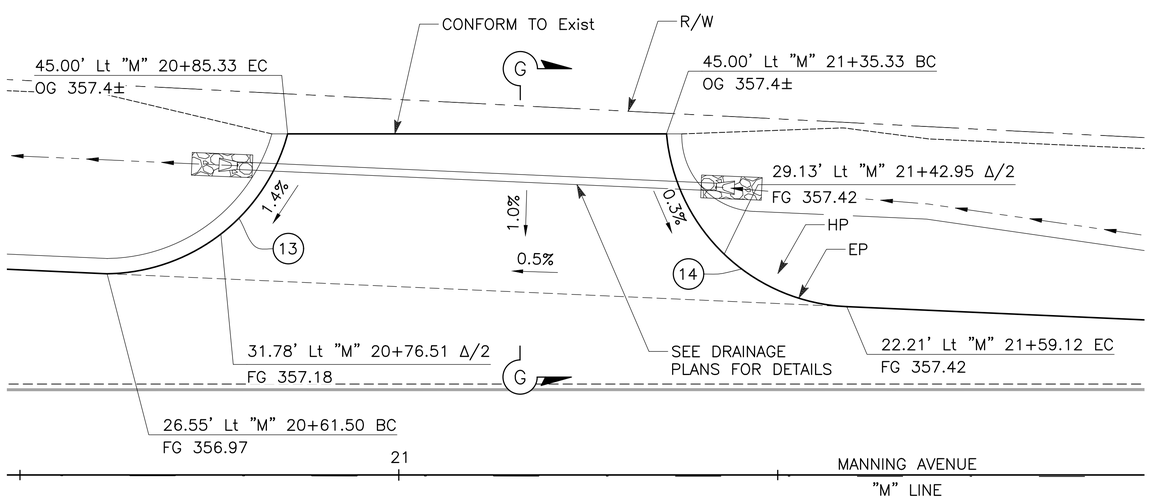

DRIVEWAY 8 DETAIL

SCALE: 1"=10'

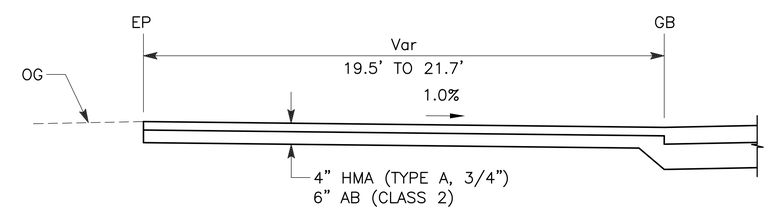

SECTION G-G

NO SCALE

	DATE	RECORD DRAWING	
DESIGNED: EB	07/07/26	RESIDENT ENGINEER	DATE
DRAWN: CM	07/07/26		
CHECKED: GG	07/07/26		

FOR RIGHT OF WAY DATA AND ACCURATE ACCESS DETERMINATION, SEE DOCUMENTS IN THE DEPARTMENT OF PUBLIC WORKS AND PLANNING.

SCALE

HORIZ 0 10' 20'

REGISTERED PROFESSIONAL ENGINEER No. 70950 Exp.6/30/27 CIVIL STATE OF CALIFORNIA

Dewberry

DEWBERRY ENGINEERING INC.
575 EAST LOCUST AVENUE SUITE 204
FRESNO, CA 93720

PROJECT

TRAVERS CREEK BRIDGE ON
MANNING AVENUE

ROAD NO. S0900 BRIDGE NO. 42C-0687

THE COUNTY OF FRESNO 1856

DEPARTMENT OF PUBLIC WORKS AND PLANNING

CONSTRUCTION DETAILS

DRAWING NO. 11256 SHEET NO. CD-4 TOTAL 62

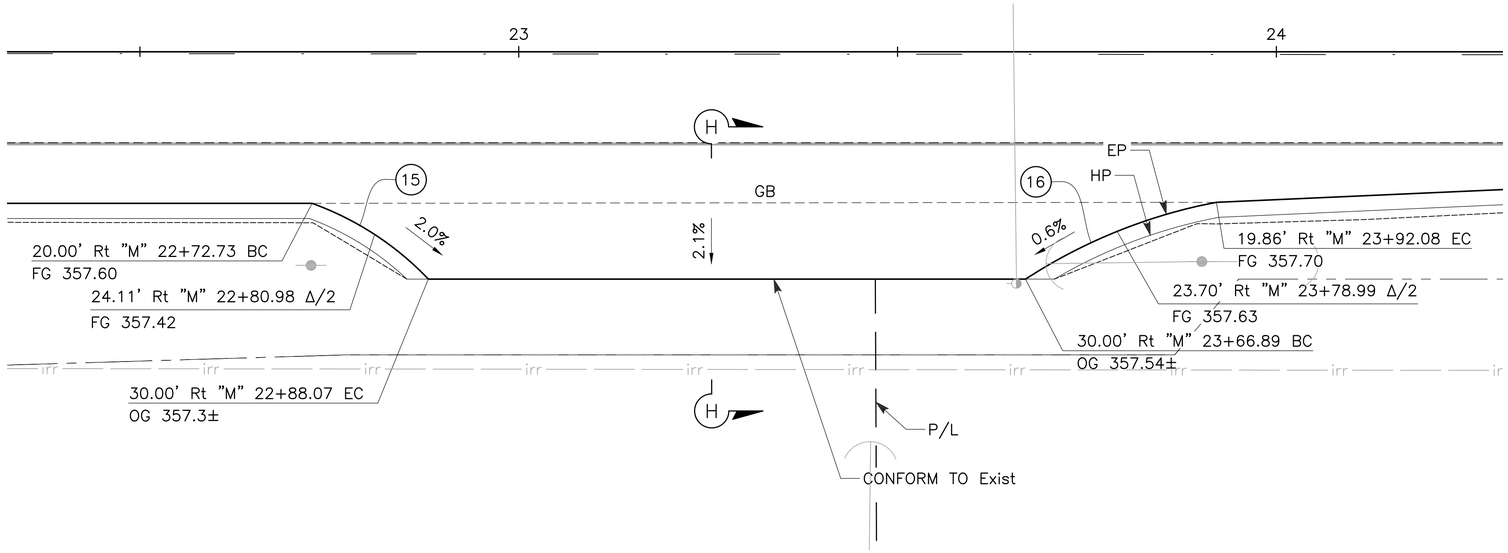

DRIVEWAY 9 DETAIL

SCALE: 1"=10'

CURVE DATA				
No.	R	Δ	T	L
15	40.00'	26°27'42"	9.40'	18.47'
16	70.00'	22°22'05"	13.84'	27.33'

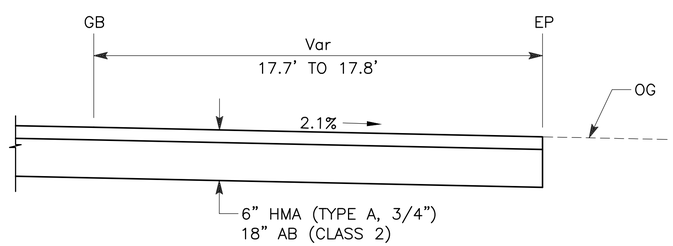

SECTION H-H

NO SCALE

	DATE	RECORD DRAWING	
DESIGNED: EB	07/07/26	RESIDENT ENGINEER	DATE
DRAWN: CM	07/07/26		
CHECKED: GG	07/07/26		

FOR RIGHT OF WAY DATA AND ACCURATE ACCESS DETERMINATION, SEE DOCUMENTS IN THE DEPARTMENT OF PUBLIC WORKS AND PLANNING.

SCALE

HORIZ 0 10' 20'

REGISTERED PROFESSIONAL ENGINEER No. 70950 Exp.6/30/27 CIVIL STATE OF CALIFORNIA

Dewberry

DEWBERRY ENGINEERING INC.
575 EAST LOCUST AVENUE SUITE 204
FRESNO, CA 93720

PROJECT

TRAVERS CREEK BRIDGE ON MANNING AVENUE

ROAD NO. S0900 BRIDGE NO. 42C-0687

THE COUNTY OF FRESNO 1856

DEPARTMENT OF PUBLIC WORKS AND PLANNING

CONSTRUCTION DETAILS

DRAWING NO. 11256 SHEET NO. CD-5 TOTAL 62

LEGEND:

FR — SC-5: FIBER ROLL

SS-4: EROSION CONTROL (HYDROSEED)

SS-7: EROSION CONTROL (BLANKET)

EROSION CONTROL QUANTITIES			
	HYDROSEED	FIBER ROLL	BLANKET
SHEET No.	SQYD	LF	SQYD
EC-1	2072	1003	954
EC-2	627	54	
TOTAL	2699	1057	954

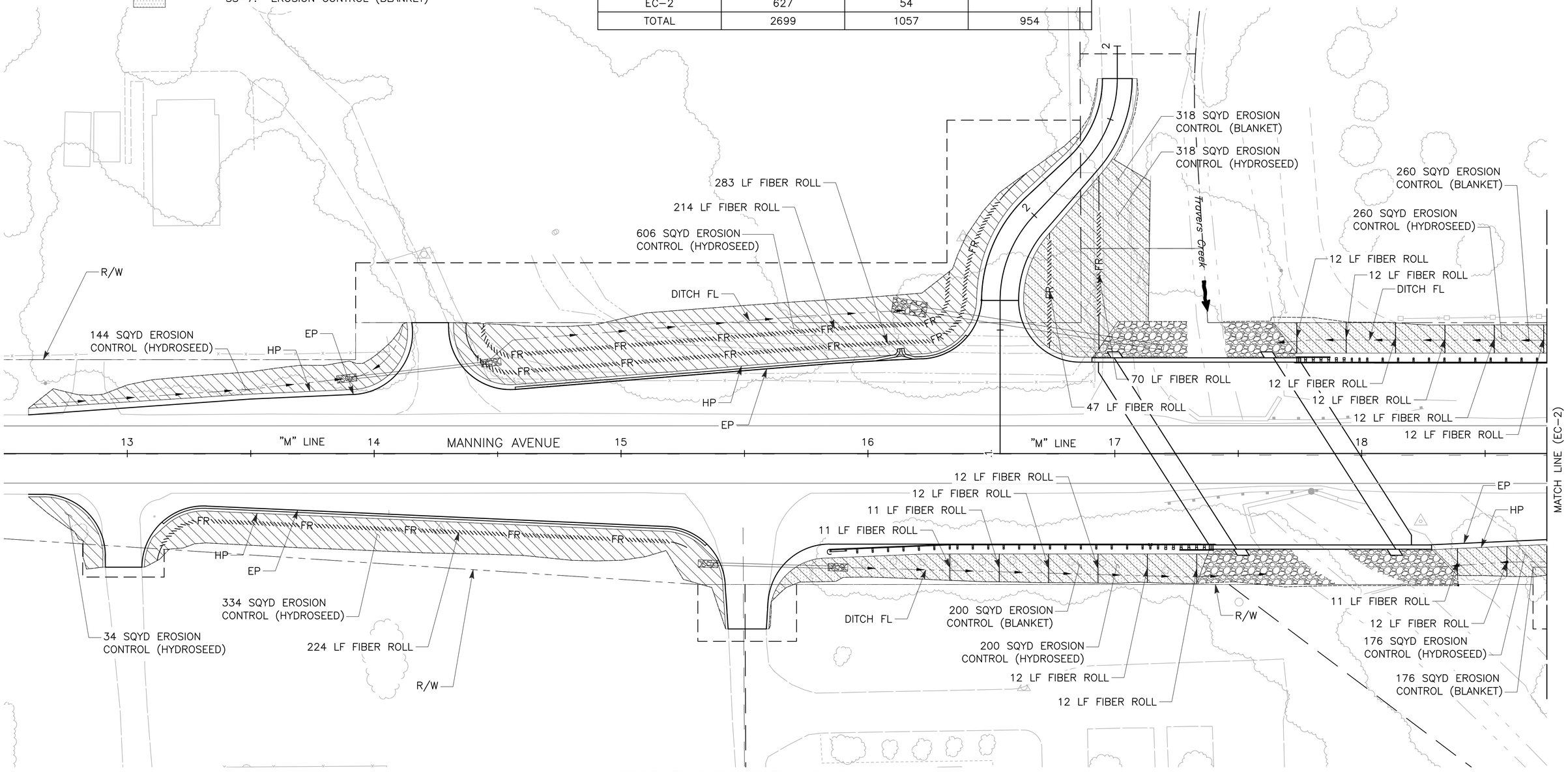

APPROVED FOR EROSION CONTROL WORK ONLY

	DATE	RECORD DRAWING	
DESIGNED: EB	07/07/26	RESIDENT ENGINEER	DATE
DRAWN: CM	07/07/26		
CHECKED: GG	07/07/26		

FOR RIGHT OF WAY DATA AND ACCURATE ACCESS DETERMINATION, SEE DOCUMENTS IN THE DEPARTMENT OF PUBLIC WORKS AND PLANNING.

SCALE

HORIZ 0 20' 40'

REGISTERED PROFESSIONAL ENGINEER No. 70950 Exp. 6/30/27 CIVIL STATE OF CALIFORNIA

Dewberry

DEWBERRY ENGINEERING INC.
575 EAST LOCUST AVENUE SUITE 204
FRESNO, CA 93720

PROJECT

TRAVERS CREEK BRIDGE ON MANNING AVENUE

ROAD NO. S0900 BRIDGE NO. 42C-0687

THE COUNTY OF FRESNO 1856

DEPARTMENT OF PUBLIC WORKS AND PLANNING

EROSION CONTROL PLAN

DRAWING NO. 11256 SHEET NO. EC-1 TOTAL 62

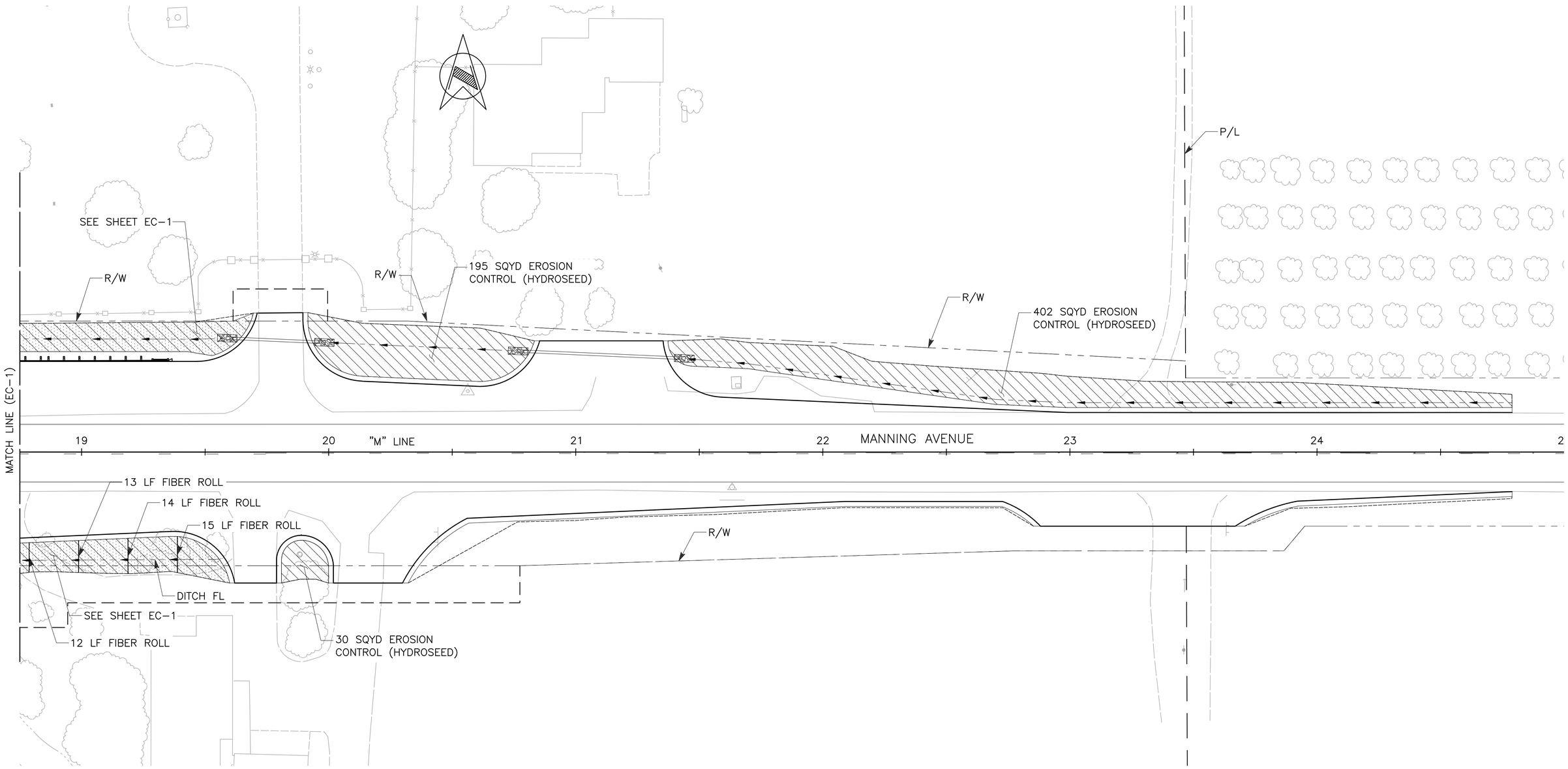

APPROVED FOR EROSION CONTROL WORK ONLY

	DATE	RECORD DRAWING	
DESIGNED: EB	07/07/26	RESIDENT ENGINEER	DATE
DRAWN: CM	07/07/26		
CHECKED: GG	07/07/26		

FOR RIGHT OF WAY DATA AND ACCURATE ACCESS DETERMINATION, SEE DOCUMENTS IN THE DEPARTMENT OF PUBLIC WORKS AND PLANNING.

SCALE

HORIZ 0 20' 40'

REGISTERED PROFESSIONAL ENGINEER No. 70950 Exp.6/30/27 CIVIL STATE OF CALIFORNIA

Dewberry

DEWBERRY ENGINEERING INC.
575 EAST LOCUST AVENUE SUITE 204
FRESNO, CA 93720

PROJECT

TRAVERS CREEK BRIDGE ON MANNING AVENUE

ROAD NO. S0900 BRIDGE NO. 42C-0687

THE COUNTY OF FRESNO 1856

DEPARTMENT OF PUBLIC WORKS AND PLANNING

EROSION CONTROL PLAN

DRAWING NO. 11256 SHEET NO. EC-2 TOTAL 62

NOTES:

1. FOR ACCURATE RIGHT-OF-WAY DATA, CONTACT COUNTY OFFICE.
2. CONTOUR GRADING REFLECTS TOP OF FINISHED GRADE.
3. SEE CG-2 FOR CONTOUR GRADING SECTION A-A.
4. SEE DRAINAGE PLAN FOR FLOWLINE AND CULVERT INFORMATION.

LEGEND:

ROCK SLOPE PROTECTION

DITCH FLOW LINE

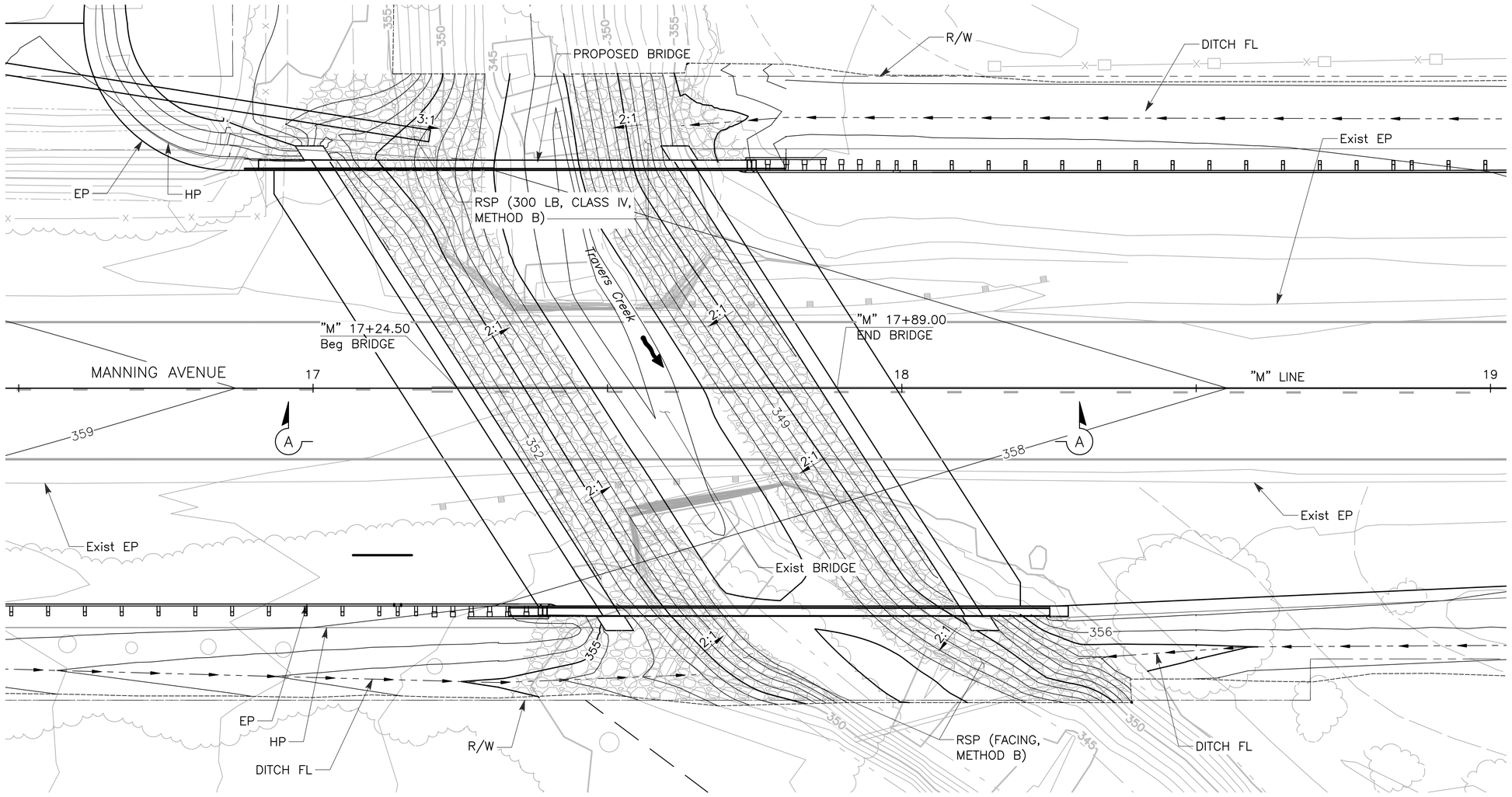

APPROVED FOR CONTOUR GRADING WORK ONLY

	DATE	RECORD DRAWING	
DESIGNED: EB	07/07/26	RESIDENT ENGINEER	DATE
DRAWN: CM	07/07/26		
CHECKED: GG	07/07/26		

FOR RIGHT OF WAY DATA AND ACCURATE ACCESS DETERMINATION, SEE DOCUMENTS IN THE DEPARTMENT OF PUBLIC WORKS AND PLANNING.

SCALE

HORIZ 0 10' 20'

REGISTERED PROFESSIONAL ENGINEER No. 70950 Exp.6/30/27 CIVIL STATE OF CALIFORNIA

Dewberry

DEWBERRY ENGINEERING INC.
575 EAST LOCUST AVENUE SUITE 204
FRESNO, CA 93720

PROJECT

TRAVERS CREEK BRIDGE ON MANNING AVENUE

ROAD NO. S0900 BRIDGE NO. 42C-0687

THE COUNTY OF FRESNO 1856

DEPARTMENT OF PUBLIC WORKS AND PLANNING

CONTOUR GRADING

DRAWING NO. 11256 SHEET NO. CG-1 TOTAL 62

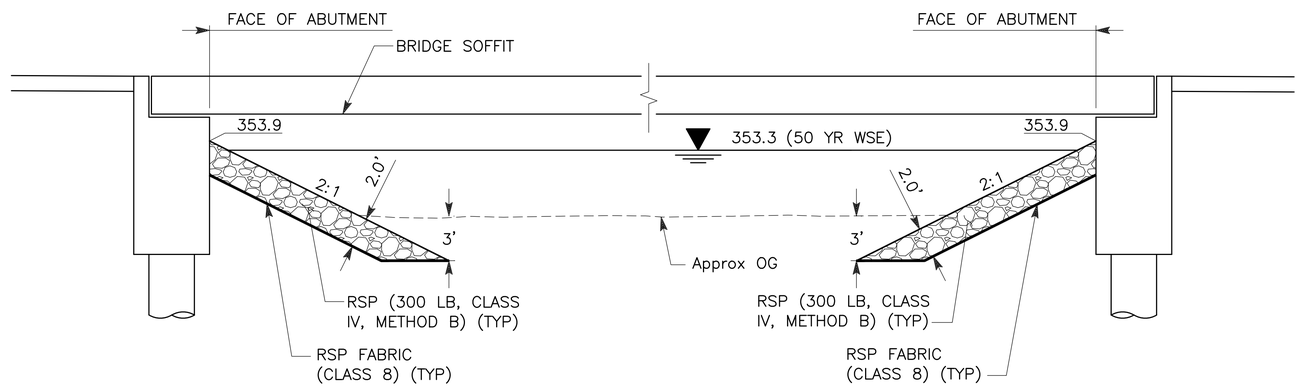

SECTION A-A

NO SCALE

APPROVED FOR CONTOUR GRADING WORK ONLY

	DATE	RECORD DRAWING		SCALE
DESIGNED: EB	07/07/26	RESIDENT ENGINEER	DATE	AS SHOWN
DRAWN: CM	07/07/26			
CHECKED: GG	07/07/26			

FOR RIGHT OF WAY DATA AND ACCURATE ACCESS DETERMINATION, SEE DOCUMENTS IN THE DEPARTMENT OF PUBLIC WORKS AND PLANNING.

REGISTERED PROFESSIONAL ENGINEER No. 70950 Exp.6/30/27 CIVIL STATE OF CALIFORNIA

Dewberry

DEWBERRY ENGINEERING INC.
575 EAST LOCUST AVENUE SUITE 204
FRESNO, CA 93720

PROJECT

TRAVERS CREEK BRIDGE ON MANNING AVENUE

ROAD NO. S0900 BRIDGE NO. 42C-0687

THE COUNTY OF FRESNO 1856

DEPARTMENT OF PUBLIC WORKS AND PLANNING

CONTOUR GRADING

DRAWING NO. 11256 SHEET NO. CG-2 TOTAL 62

NOTES:

1. FOR ACCURATE RIGHT-OF-WAY DATA, CONTACT COUNTY OFFICE.
2. SEE LAYOUT SHEETS FOR ALIGNMENT GEOMETRY INFORMATION.
3. SEE DRAINAGE PROFILES FOR ADDITIONAL DRAINAGE INFORMATION.
4. SEE CALTRANS STANDARD PLAN D87D FOR HMA OVERSIDE DRAIN DETAILS.
5. SEE CONTOUR GRADING PLAN FOR RSP DETAILS AND INFORMATION.

LEGEND:

- (No.) DRAINAGE SYSTEM NUMBER
- (xx) DRAINAGE ITEM
- ROCK SLOPE PROTECTION
- DITCH FLOW LINE

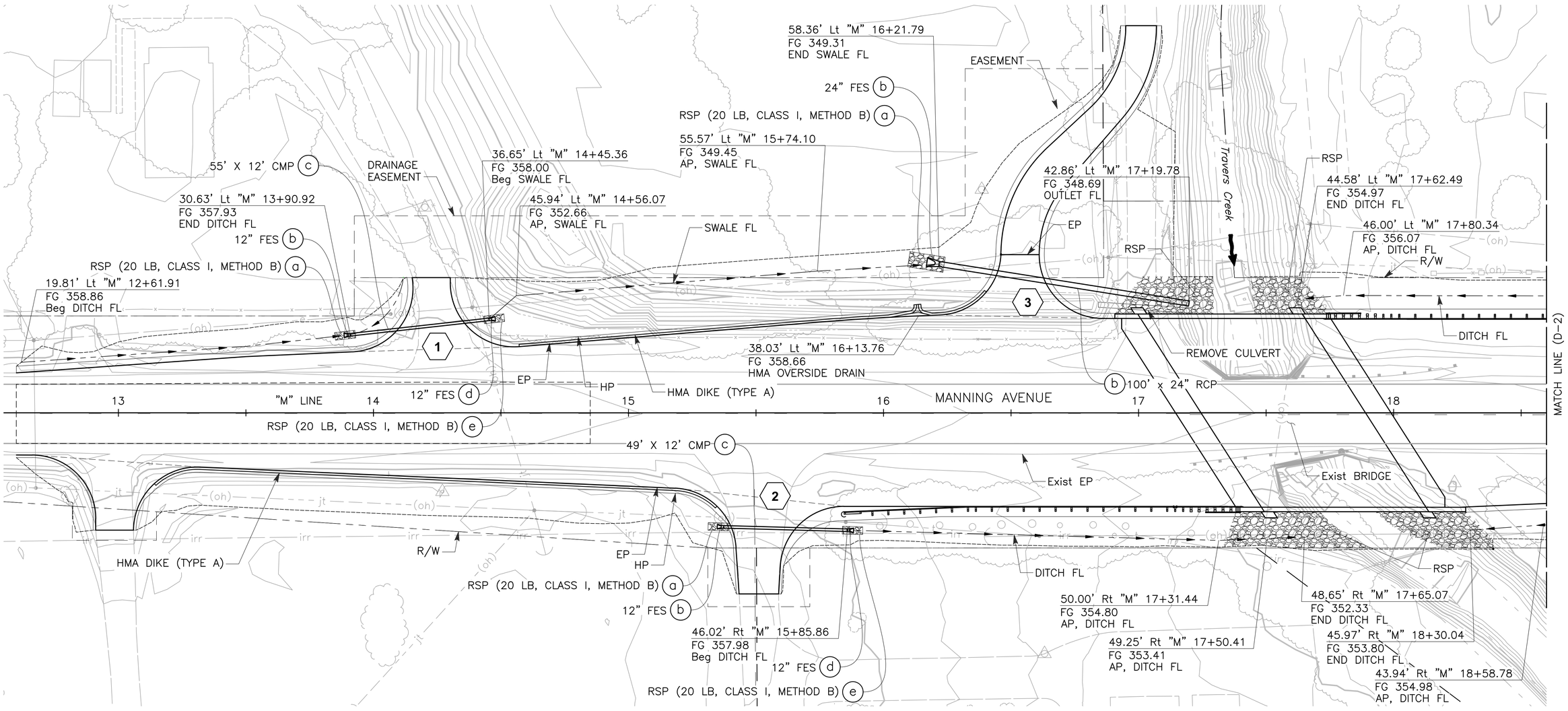

APPROVED FOR DRAINAGE WORK ONLY

	DATE	RECORD DRAWING	
DESIGNED: EB	07/07/26	RESIDENT ENGINEER	DATE
DRAWN: CM	07/07/26		
CHECKED: GG	07/07/26		

FOR RIGHT OF WAY DATA AND ACCURATE ACCESS DETERMINATION, SEE DOCUMENTS IN THE DEPARTMENT OF PUBLIC WORKS AND PLANNING.

SCALE

HORIZ 0 20' 40'

REGISTERED PROFESSIONAL ENGINEER No. 70950 Exp.6/30/27 CIVIL STATE OF CALIFORNIA

Dewberry

DEWBERRY ENGINEERING INC.
575 EAST LOCUST AVENUE SUITE 204
FRESNO, CA 93720

PROJECT

TRAVERS CREEK BRIDGE ON MANNING AVENUE

ROAD NO. S0900 BRIDGE NO. 42C-0687

THE COUNTY OF FRESNO 1856

DEPARTMENT OF PUBLIC WORKS AND PLANNING

DRAINAGE PLAN

DRAWING NO. 11256 SHEET NO. D-1 TOTAL 62

NOTES:

1. FOR ACCURATE RIGHT-OF-WAY DATA, CONTACT COUNTY OFFICE.
2. SEE LAYOUT SHEETS FOR ALIGNMENT GEOMETRY INFORMATION.
3. SEE DRAINAGE PROFILES FOR ADDITIONAL DRAINAGE INFORMATION.
4. SEE CALTRANS STANDARD PLAN D87D FOR HMA OVERSIDE DRAIN DETAILS.
5. SEE CONTOUR GRADING PLAN FOR RSP DETAILS AND INFORMATION.

LEGEND:

- (No.) DRAINAGE SYSTEM NUMBER
- (xx) DRAINAGE ITEM
- ROCK SLOPE PROTECTION
- DITCH FLOW LINE

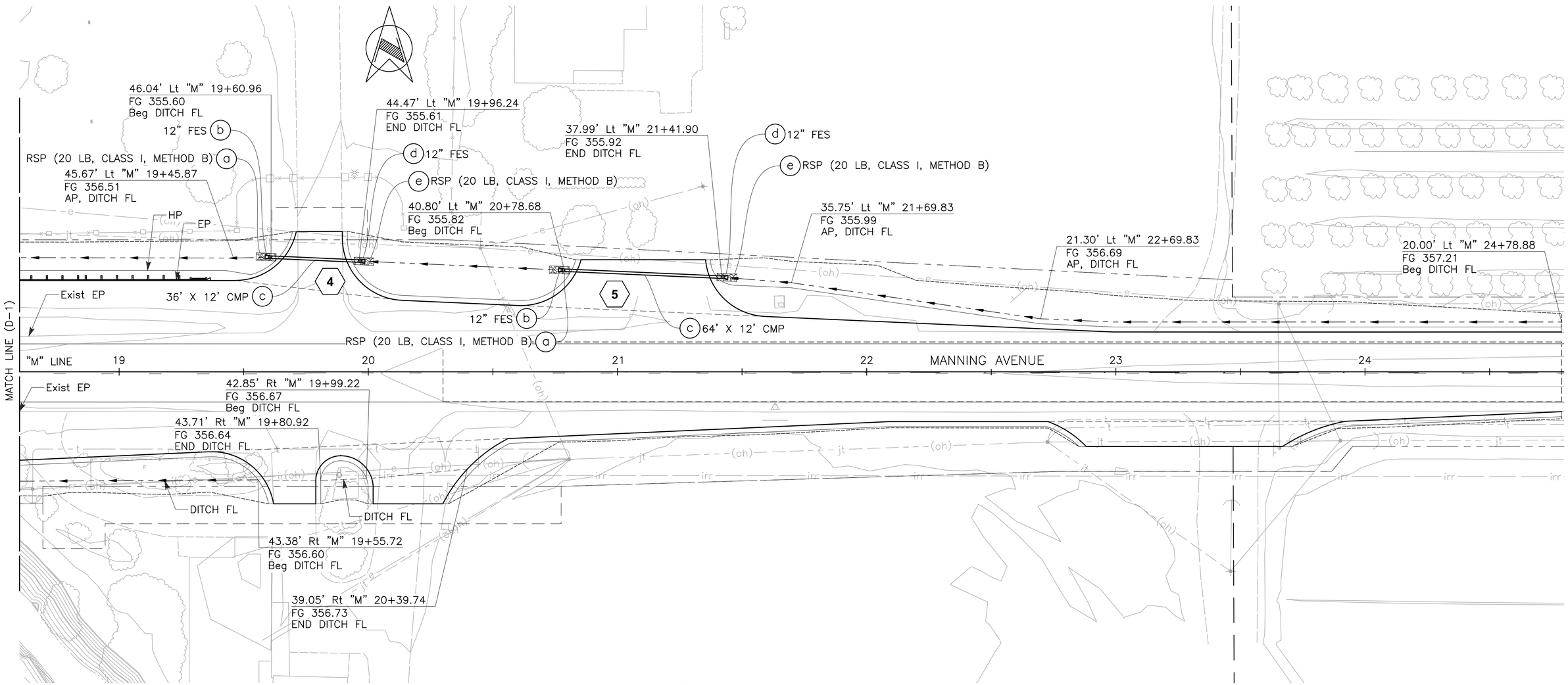

APPROVED FOR DRAINAGE WORK ONLY

	DATE	RECORD DRAWING	
DESIGNED: EB	07/07/26	RESIDENT ENGINEER	DATE
DRAWN: CM	07/07/26		
CHECKED: GG	07/07/26		

FOR RIGHT OF WAY DATA AND ACCURATE ACCESS DETERMINATION, SEE DOCUMENTS IN THE DEPARTMENT OF PUBLIC WORKS AND PLANNING.

SCALE

HORIZ 0 20' 40'

REGISTERED PROFESSIONAL ENGINEER No. 70950 Exp.6/30/27 CIVIL STATE OF CALIFORNIA

Dewberry

DEWBERRY ENGINEERING INC.
575 EAST LOCUST AVENUE SUITE 204
FRESNO, CA 93720

PROJECT

TRAVERS CREEK BRIDGE ON MANNING AVENUE

ROAD NO. S0900 BRIDGE NO. 42C-0687

THE COUNTY OF FRESNO 1856

DEPARTMENT OF PUBLIC WORKS AND PLANNING

DRAINAGE PLAN

DRAWING NO. 11256 SHEET NO. D-2 TOTAL 62

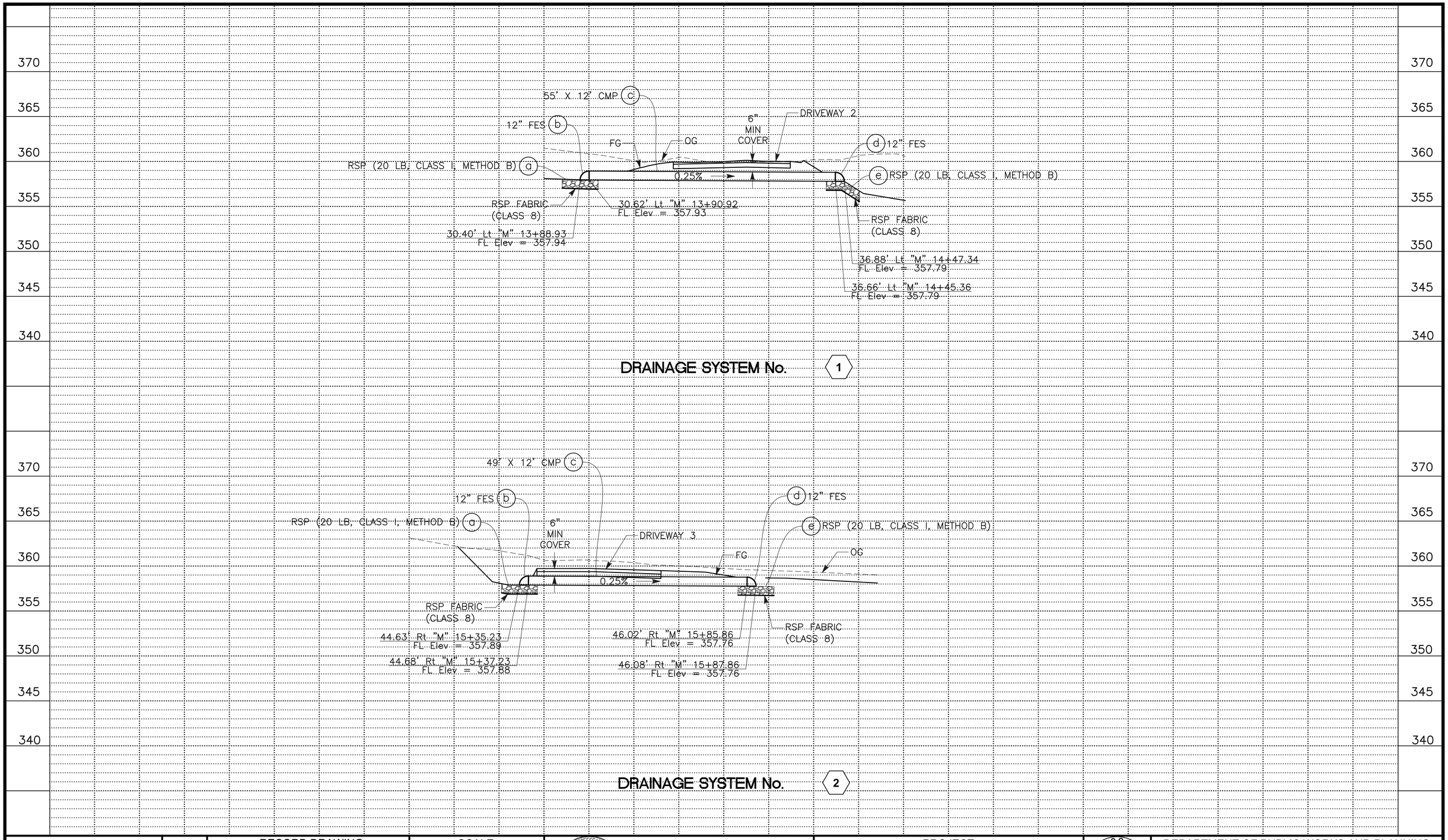

	DATE	RECORD DRAWING	
DESIGNED: EB	07/07/26	RESIDENT ENGINEER	DATE
DRAWN: CM	07/07/26		
CHECKED: GG	07/07/26		

FOR RIGHT OF WAY DATA AND ACCURATE ACCESS DETERMINATION, SEE DOCUMENTS IN THE DEPARTMENT OF PUBLIC WORKS AND PLANNING.

SCALE

HORIZ 0 10' 20'

VERT 0 5' 10'

REGISTERED PROFESSIONAL ENGINEER No. 70950 Exp.6/30/27 CIVIL STATE OF CALIFORNIA

Dewberry

DEWBERRY ENGINEERING INC.
575 EAST LOCUST AVENUE SUITE 204
FRESNO, CA 93720

PROJECT

TRAVERS CREEK BRIDGE ON MANNING AVENUE

ROAD NO. S0900 BRIDGE NO. 42C-0687

THE COUNTY OF FRESNO 1856

DEPARTMENT OF PUBLIC WORKS AND PLANNING

DRAINAGE PROFILES

DRAWING NO. 11256 SHEET NO. DP-1 TOTAL 62

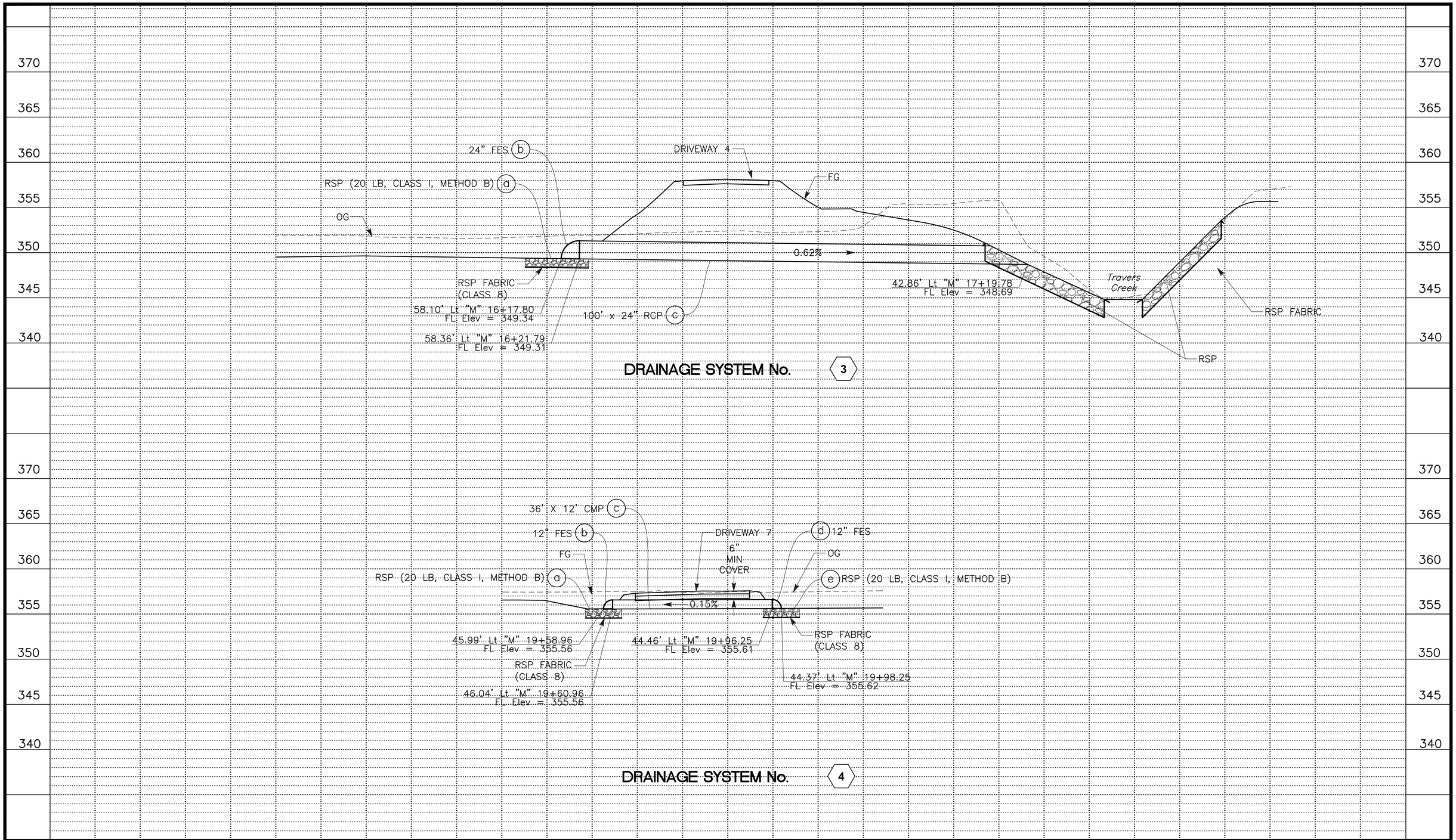

	DATE	RECORD DRAWING	
DESIGNED: EB	07/07/26	RESIDENT ENGINEER	DATE
DRAWN: CM	07/07/26		
CHECKED: GG	07/07/26		

FOR RIGHT OF WAY DATA AND ACCURATE ACCESS DETERMINATION, SEE DOCUMENTS IN THE DEPARTMENT OF PUBLIC WORKS AND PLANNING.

SCALE

HORIZ 0 10' 20'

VERT 0 5' 10'

REGISTERED PROFESSIONAL ENGINEER No. 70950 Exp.6/30/27 CIVIL STATE OF CALIFORNIA

Dewberry

DEWBERRY ENGINEERING INC.
575 EAST LOCUST AVENUE SUITE 204
FRESNO, CA 93720

PROJECT

TRAVERS CREEK BRIDGE ON MANNING AVENUE

ROAD NO. S0900 BRIDGE NO. 42C-0687

THE COUNTY OF FRESNO 1856

DEPARTMENT OF PUBLIC WORKS AND PLANNING

DRAINAGE PROFILES

DRAWING NO. 11256 SHEET NO. DP-2 TOTAL 62

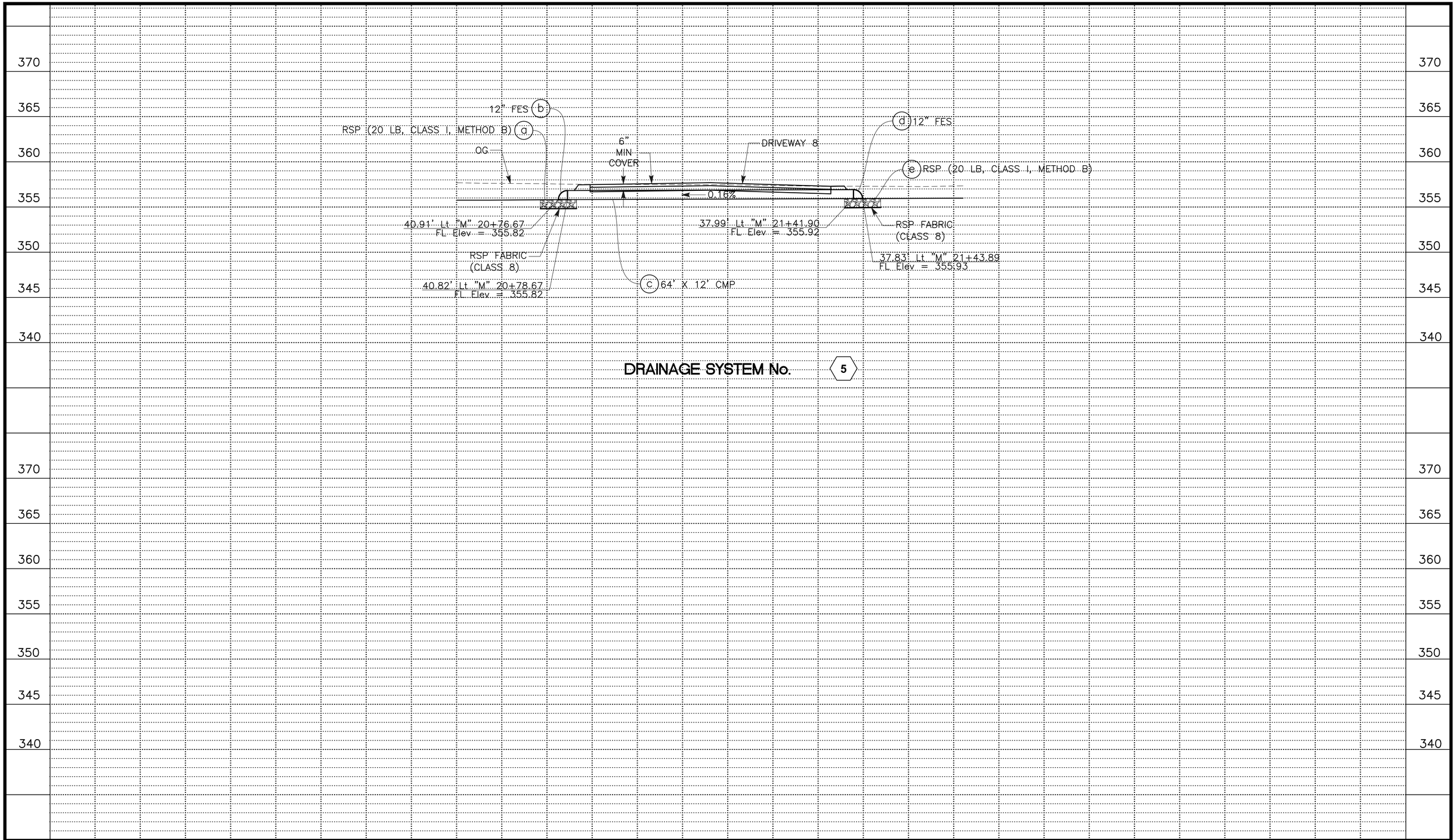

	DATE	RECORD DRAWING	
DESIGNED: EB	07/07/26	RESIDENT ENGINEER	DATE
DRAWN: CM	07/07/26		
CHECKED: GG	07/07/26		

FOR RIGHT OF WAY DATA AND ACCURATE ACCESS DETERMINATION, SEE DOCUMENTS IN THE DEPARTMENT OF PUBLIC WORKS AND PLANNING.

SCALE

HORIZ 0 10' 20'

VERT 0 5' 10'

REGISTERED PROFESSIONAL ENGINEER No. 70950 Exp.6/30/27 CIVIL STATE OF CALIFORNIA

Dewberry

DEWBERRY ENGINEERING INC.
575 EAST LOCUST AVENUE SUITE 204
FRESNO, CA 93720

PROJECT

TRAVERS CREEK BRIDGE ON MANNING AVENUE

ROAD NO. S0900 BRIDGE NO. 42C-0687

THE COUNTY OF FRESNO 1856

DEPARTMENT OF PUBLIC WORKS AND PLANNING

DRAINAGE PROFILES

DRAWING NO. 11256 SHEET NO. DP-3 TOTAL 62

NOTES:

1. FOR ACCURATE RIGHT–OF–WAY DATA, CONTACT COUNTY OFFICE.
2. UTILITIES SHOWN ARE APPROXIMATE. CONTRACTOR TO VERIFY LOCATION OF UTILITIES PRIOR TO CONSTRUCTION AND MUST NOTIFY THE ENGINEER OF ANY CONFLICTS.
3. FOR STORM DRAIN LOCATIONS AND INFORMATION, SEE DRAINAGE PLAN.
4. PROTECT ALL UTILITIES IN PLACE UNLESS OTHERWISE NOTED.

UTILITY LEGEND:

- jt — (oh) — Exist JOINT OVERHEAD (PG&E/FRONTIER)
- e — (oh) — Exist ELECTRICAL OVERHEAD (PG&E)
- t — (oh) — Exist TELEPHONE OVERHEAD (FRONTIER)
- t — t — Exist UNDERGROUND TELEPHONE (FRONTIER)
- irr — Exist IRRIGATION (ALTA IRRIGATION DISTRICT)

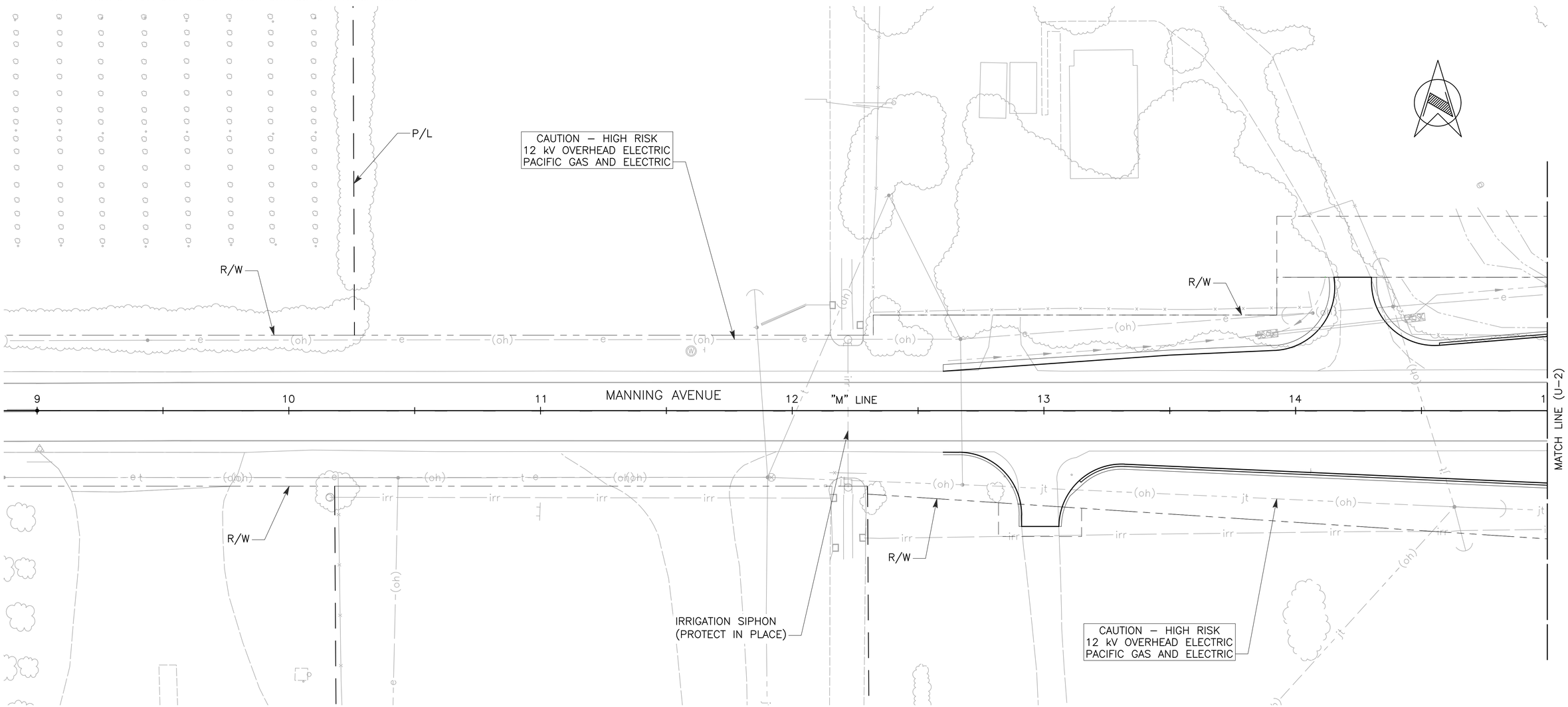

APPROVED FOR UTILITY WORK ONLY

	DATE	RECORD DRAWING	
DESIGNED: EB	07/07/26	RESIDENT ENGINEER	DATE
DRAWN: CM	07/07/26		
CHECKED: GG	07/07/26		

FOR RIGHT OF WAY DATA AND ACCURATE ACCESS DETERMINATION, SEE DOCUMENTS IN THE DEPARTMENT OF PUBLIC WORKS AND PLANNING.

SCALE

HORIZ 0 20' 40'

REGISTERED PROFESSIONAL ENGINEER No. 70950 Exp.6/30/27 CIVIL STATE OF CALIFORNIA

Dewberry

DEWBERRY ENGINEERING INC.
575 EAST LOCUST AVENUE SUITE 204
FRESNO, CA 93720

PROJECT

TRAVERS CREEK BRIDGE ON MANNING AVENUE

ROAD NO. S0900 BRIDGE NO. 42C-0687

THE COUNTY OF FRESNO 1856

DEPARTMENT OF PUBLIC WORKS AND PLANNING

UTILITY PLAN

DRAWING NO. 11256 SHEET NO. U-1 TOTAL 62

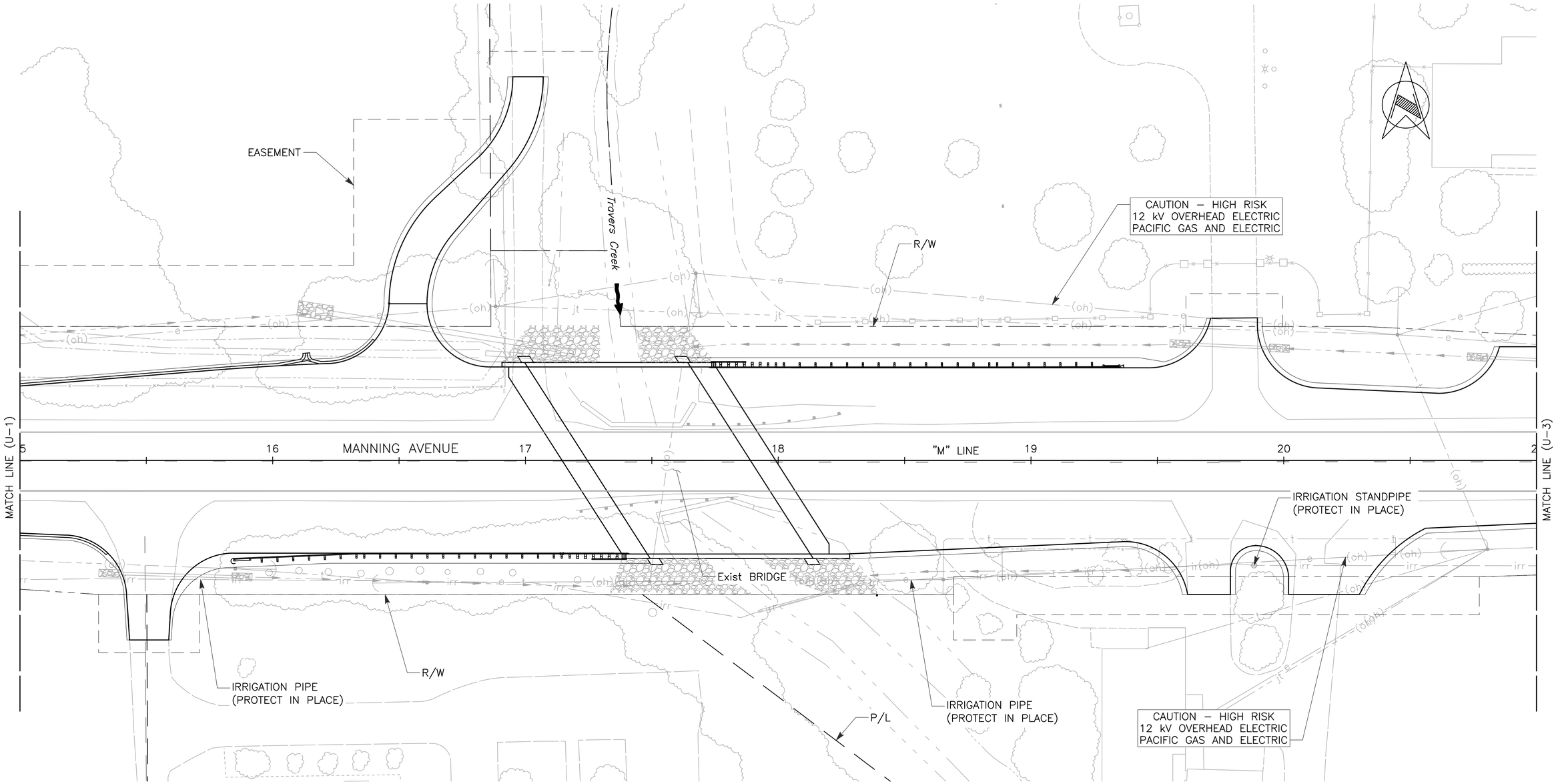

APPROVED FOR UTILITY WORK ONLY

	DATE	RECORD DRAWING	
DESIGNED: EB	07/07/26	RESIDENT ENGINEER	DATE
DRAWN: CM	07/07/26		
CHECKED: GG	07/07/26		

FOR RIGHT OF WAY DATA AND ACCURATE ACCESS DETERMINATION, SEE DOCUMENTS IN THE DEPARTMENT OF PUBLIC WORKS AND PLANNING.

SCALE

HORIZ 0 20' 40'

REGISTERED PROFESSIONAL ENGINEER No. 70950 Exp.6/30/27 CIVIL STATE OF CALIFORNIA

Dewberry

DEWBERRY ENGINEERING INC.
575 EAST LOCUST AVENUE SUITE 204
FRESNO, CA 93720

PROJECT

TRAVERS CREEK BRIDGE ON MANNING AVENUE

ROAD NO. S0900 BRIDGE NO. 42C-0687

THE COUNTY OF FRESNO 1856

DEPARTMENT OF PUBLIC WORKS AND PLANNING

UTILITY PLAN

DRAWING NO. 11256 SHEET NO. U-2 TOTAL 62

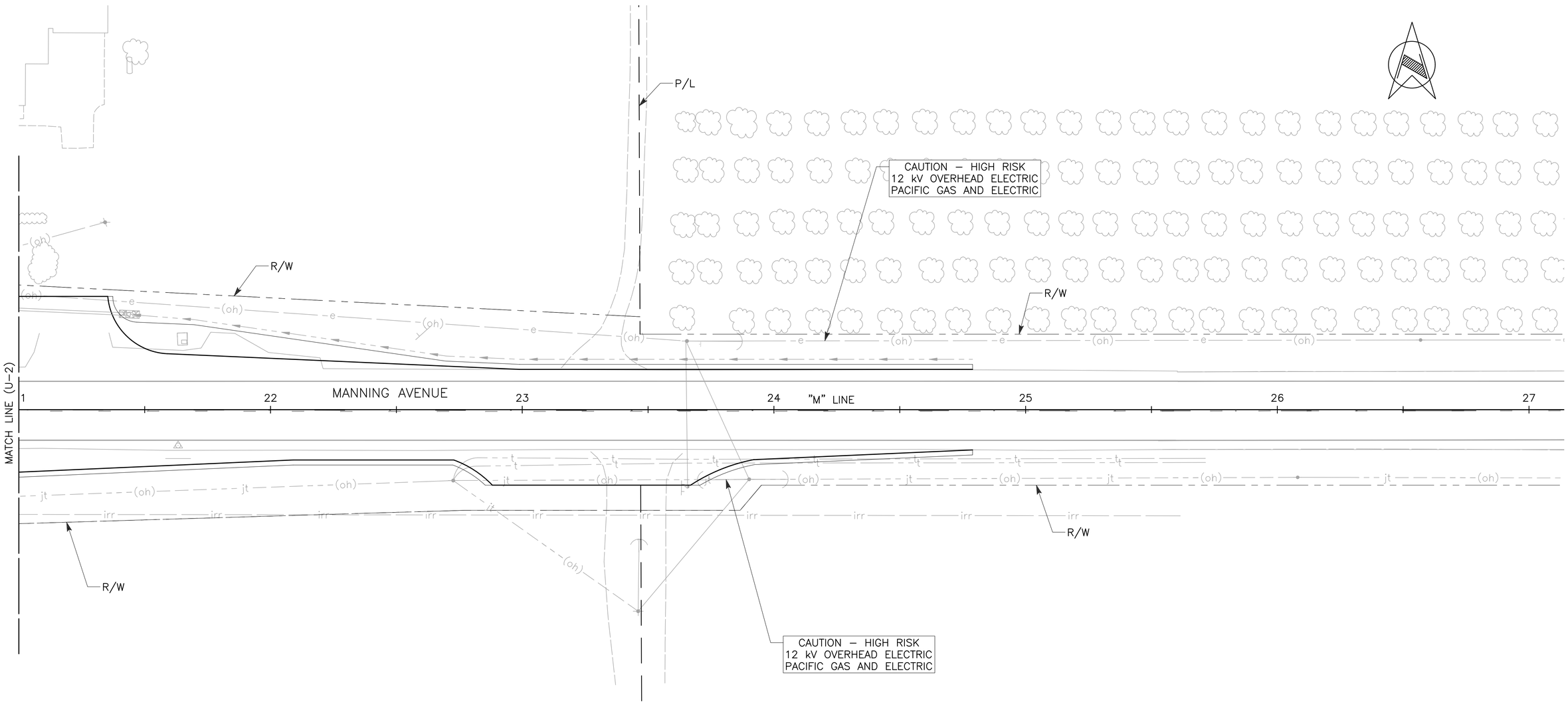

APPROVED FOR UTILITY WORK ONLY

	DATE	RECORD DRAWING	
DESIGNED: EB	07/07/26	RESIDENT ENGINEER	DATE
DRAWN: CM	07/07/26		
CHECKED: GG	07/07/26		

FOR RIGHT OF WAY DATA AND ACCURATE ACCESS DETERMINATION, SEE DOCUMENTS IN THE DEPARTMENT OF PUBLIC WORKS AND PLANNING.

SCALE

HORIZ 0 20' 40'

REGISTERED PROFESSIONAL ENGINEER
No. 70950
Exp.6/30/27
CIVIL
STATE OF CALIFORNIA

Dewberry

DEWBERRY ENGINEERING INC.
575 EAST LOCUST AVENUE SUITE 204
FRESNO, CA 93720

PROJECT

TRAVERS CREEK BRIDGE ON
MANNING AVENUE

ROAD NO. S0900 BRIDGE NO. 42C-0687

THE COUNTY OF FRESNO 1856

DEPARTMENT OF PUBLIC WORKS AND PLANNING

UTILITY PLAN

DRAWING NO. 11256 SHEET NO. U-3 TOTAL 62

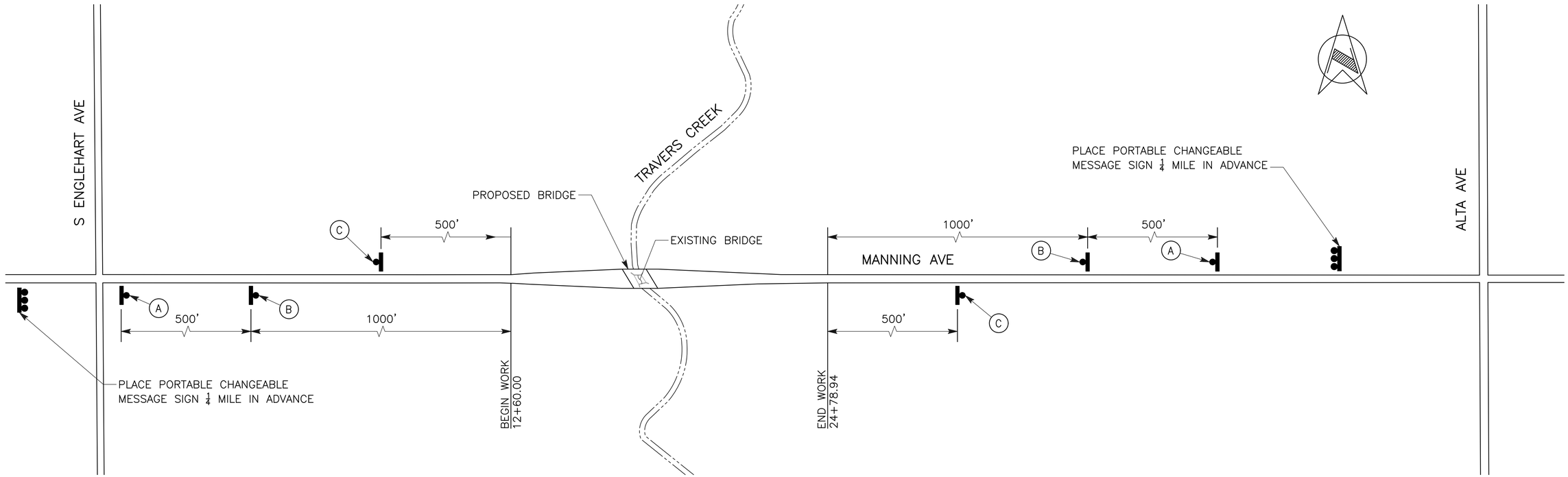

LEGEND:

- — CONSTRUCTION AREA SIGN
- — PORTABLE CHANGEABLE MESSAGE SIGN

NOTES:

1. FOR ALL SIGN DETAILS REFER TO THE LATEST EDITION OF THE CALIFORNIA MUTCD.
2. ALL SIGN CODES SHOWN ARE FEDERAL SIGN CODES UNLESS OTHERWISE NOTED WITH THE CALIFORNIA SIGN CODE DESIGNATION (CA).

STATIONARY MOUNTED CONSTRUCTION AREA SIGNS

SIGN No.	SIGN CODE	PANEL SIZE	No. OF POSTS AND SIZE	No. OF SIGNS	SIGN MESSAGE
A	W20–1	36" x 36"	1 – 4" x 4"	2	ROAD WORK AHEAD
B	W3–5a	36" x 36"	1 – 4" x 4"	2	45 MPH SPEED ZONE AHEAD
C	G20–2	36" x 18"	1 – 4" x 4"	2	END ROAD WORK

APPROVED FOR CONSTRUCTION AREA SIGN WORK ONLY

	DATE	RECORD DRAWING		SCALE
DESIGNED: EB	07/07/26	RESIDENT ENGINEER	DATE	NO SCALE
DRAWN: CM	07/07/26			
CHECKED: GG	07/07/26			

FOR RIGHT OF WAY DATA AND ACCURATE ACCESS DETERMINATION, SEE DOCUMENTS IN THE DEPARTMENT OF PUBLIC WORKS AND PLANNING.

REGISTERED PROFESSIONAL ENGINEER No. 70950 Exp.6/30/27 CIVIL STATE OF CALIFORNIA

Dewberry

DEWBERRY ENGINEERING INC.
575 EAST LOCUST AVENUE SUITE 204
FRESNO, CA 93720

PROJECT

TRAVERS CREEK BRIDGE ON MANNING AVENUE

ROAD NO. S0900 BRIDGE NO. 42C-0687

THE COUNTY OF FRESNO

DEPARTMENT OF PUBLIC WORKS AND PLANNING

CONSTRUCTION AREA SIGNS

DRAWING NO. 11256 SHEET NO. CS-1 TOTAL 62

LEGEND:

- ROADWAY WORK
- TEMPORARY CRASH CUSHION (ABSORB 350 OR EQUIVALENT)
- TYPE III BARRICADE
- DIRECTION OF TRAFFIC
- CHANNELIZER (SURFACE MOUNTED), SPACING 25' Max
- CONSTRUCTION AREA SIGN
- TEMPORARY RAILING (TYPE K)

NOTES:

1. FOR COMPLETE RIGHT OF WAY AND ACCURATE ACCESS DATA, SEE RIGHT OF WAY RECORD MAPS AT FRESNO COUNTY OFFICE.
2. MAINTAIN 11' MINIMUM TRAVEL LANES.
3. MAINTAIN CLEAR LINE OF SIGHT AT DRIVEWAYS.
4. INSTALL TEMPORARY HIGH VISIBILITY FENCE (ESA FENCING) PRIOR TO BEGINNING WORK AND PRIOR TO ANY GROUND DISTURBING ACTIVITIES.
5. ALL TEMPORARY PAVEMENT MARKINGS SHALL BE TEMPORARY PAVEMENT MARKING (PAINT).
6. SIGN LOCATIONS ARE APPROXIMATE. EXACT SIGN LOCATIONS TO BE DETERMINED BY THE ENGINEER.
7. CONFLICTING SIGNS TO BE REMOVED OR COVERED DURING CONSTRUCTION AS APPROVED BY THE ENGINEER.
8. FINAL HMA LIFT SHALL BE PLACED DURING LAST STAGE.
9. PORTABLE CHANGEABLE MESSAGE SIGN INCLUDING CONSTRUCTION AREA ADVANCED WARNING SIGNS TO BE INSTALLED PRIOR TO STAGE 1 CONSTRUCTION.

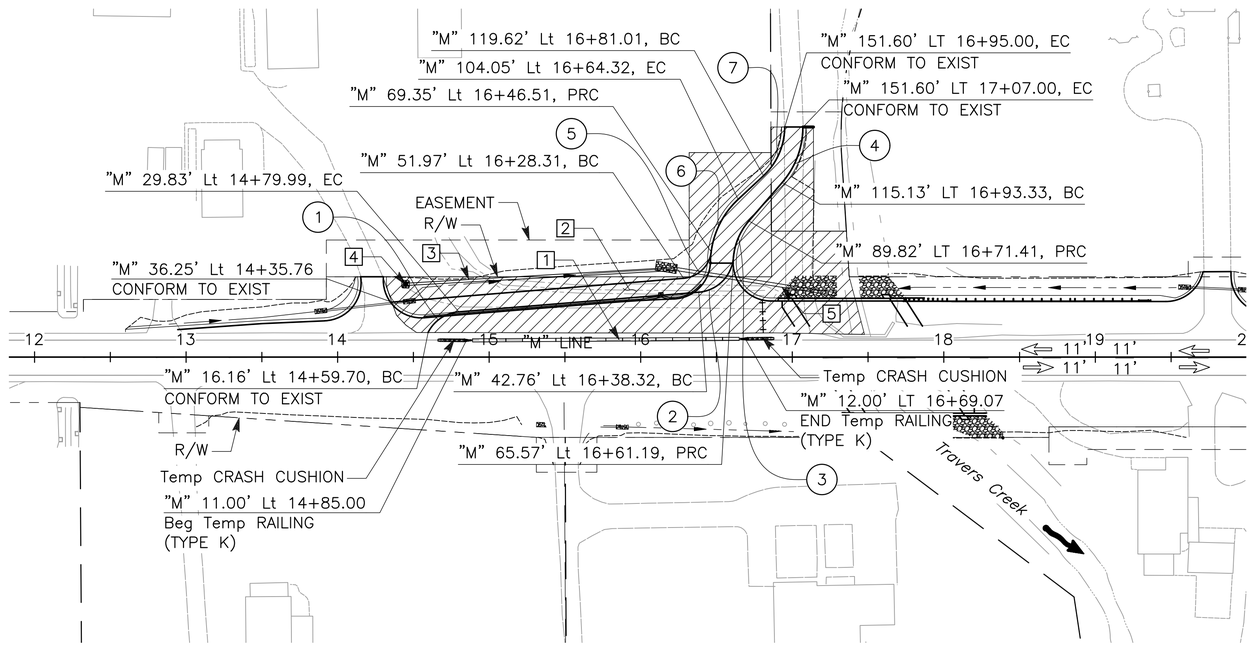

CURVE DATA				
No.	R	Δ	T	L
1	25'	58°35'08"	14.03'	25.56'
2	25'	80°30'33"	21.17'	35.13'
3	42'	36°04'10"	13.84'	26.76'
4	56'	40°53'31"	20.88'	39.97'
5	20'	77°59'14"	16.19'	27.22'
6	58'	39°38'47"	20.73'	39.79'
7	44'	46°59'27"	19.13'	36.09'

STAGE 1A CONSTRUCTION NOTES:

1. PLACE TEMPORARY RAILING (TYPE K), TEMPORARY CRASH CUSHIONS, TEMPORARY STRIPING, AND OTHER TRAFFIC HANDLING MEASURES ALONG MANNING AVENUE.
2. CONSTRUCT TEMPORARY DRIVEWAY USING NATIVE MATERIAL.
3. CONSTRUCT 177 LF 24" TEMPORARY CULVERT.
4. CONSTRUCT TEMPORARY DRAIN INLET.
5. CONSTRUCT 108 LF 24" RCP.

STAGE 1A TRAFFIC HANDLING NOTE:

1. MAINTAIN DRIVEWAY ACCESS DURING CONSTRUCTION. CONSOLIDATE DRIVEWAYS AS NEEDED.

APPROVED FOR STAGE CONSTRUCTION AND TRAFFIC HANDLING WORK ONLY

	DATE	RECORD DRAWING	
DESIGNED: EB	07/07/26	RESIDENT ENGINEER	DATE
DRAWN: CM	07/07/26		
CHECKED: GG	07/07/26		

FOR RIGHT OF WAY DATA AND ACCURATE ACCESS DETERMINATION, SEE DOCUMENTS IN THE DEPARTMENT OF PUBLIC WORKS AND PLANNING.

SCALE

HORIZ 0 50' 100'

REGISTERED PROFESSIONAL ENGINEER No. 70950 Exp.6/30/27 CIVIL STATE OF CALIFORNIA

Dewberry

DEWBERRY ENGINEERING INC.
575 EAST LOCUST AVENUE SUITE 204
FRESNO, CA 93720

PROJECT

TRAVERS CREEK BRIDGE ON MANNING AVENUE

ROAD NO. S0900 BRIDGE NO. 42C-0687

THE COUNTY OF FRESNO 1856

DEPARTMENT OF PUBLIC WORKS AND PLANNING

STAGE CONSTRUCTION AND TRAFFIC HANDLING PLAN STAGE 1A

DRAWING NO. 11256 SHEET NO. SC-1 TOTAL 62

LEGEND:

- ROADWAY WORK
- STRUCTURE WORK
- BRIDGE REMOVAL
- TEMPORARY PAVEMENT (0.35' HMA OVER 90% COMPACTED NATIVE MATERIAL)
- TEMPORARY CRASH CUSHION (ABSORB 350 OR EQUIVALENT)
- TYPE III BARRICADE
- DIRECTION OF TRAFFIC
- CHANNELIZER (SURFACE MOUNTED), SPACING 25' Max
- CONSTRUCTION AREA SIGN
- TEMPORARY RAILING (TYPE K)

NOTES:

1. FOR COMPLETE RIGHT OF WAY AND ACCURATE ACCESS DATA, SEE RIGHT OF WAY RECORD MAPS AT FRESNO COUNTY OFFICE.
2. MAINTAIN 11' MINIMUM TRAVEL LANES.
3. MAINTAIN CLEAR LINE OF SIGHT AT DRIVEWAYS.
4. INSTALL TEMPORARY HIGH VISIBILITY FENCE (ESA FENCING) PRIOR TO BEGINNING WORK AND PRIOR TO ANY GROUND DISTURBING ACTIVITIES.
5. ALL TEMPORARY PAVEMENT MARKINGS SHALL BE TEMPORARY PAVEMENT MARKING (PAINT).
6. SIGN LOCATIONS ARE APPROXIMATE. EXACT SIGN LOCATIONS TO BE DETERMINED BY THE ENGINEER.
7. CONFLICTING SIGNS TO BE REMOVED OR COVERED DURING CONSTRUCTION AS APPROVED BY THE ENGINEER.
8. FINAL HMA LIFT SHALL BE PLACED DURING LAST STAGE.

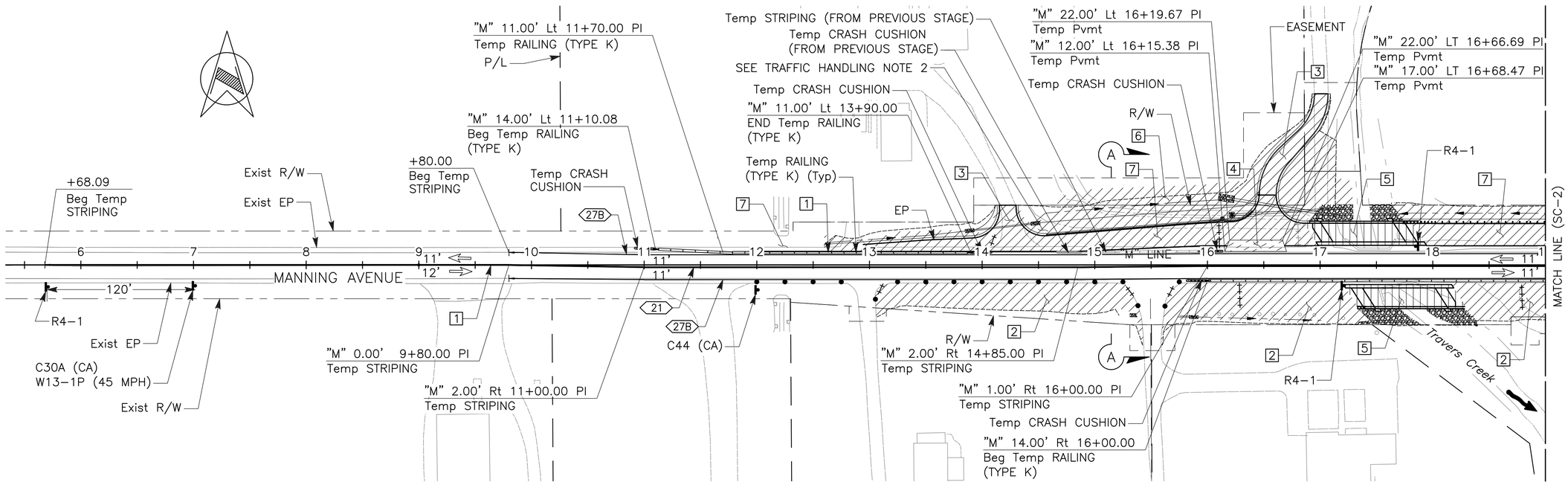

STAGE 1B CONSTRUCTION NOTES:

1. PLACE TEMPORARY RAILING (TYPE K), TEMPORARY CRASH CUSHIONS, TEMPORARY STRIPING, AND OTHER TRAFFIC HANDLING MEASURES ALONG MANNING AVENUE.
2. CONSTRUCT SUBGRADE.
3. CONSTRUCT DRIVEWAY.
4. CONSTRUCT DRIVEWAY CONFORM.
5. CONSTRUCT BRIDGE.
6. CONSTRUCT EMBANKMENT.
7. CONSTRUCT ROADWAY IMPROVEMENTS. FEATHER PAVEMENT AS NEEDED TO MAINTAIN DRIVEWAY ACCESS.

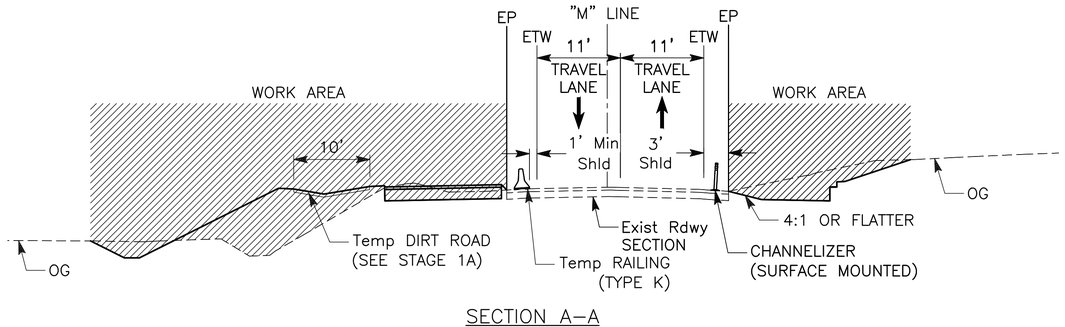

SECTION A–A
NO SCALE

STAGE 1B TRAFFIC HANDLING NOTES:

1. MAINTAIN DRIVEWAY ACCESS DURING CONSTRUCTION. CONSOLIDATE DRIVEWAYS AS NEEDED.
2. ACCESS DRIVEWAY 4 THROUGH TEMPORARY DIRT ROAD CONSTRUCTED IN STAGE 1A.

APPROVED FOR STAGE CONSTRUCTION AND TRAFFIC HANDLING WORK ONLY

	DATE	RECORD DRAWING	
DESIGNED: EB	07/07/26	RESIDENT ENGINEER	DATE
DRAWN: CM	07/07/26		
CHECKED: GG	07/07/26		

FOR RIGHT OF WAY DATA AND ACCURATE ACCESS DETERMINATION, SEE DOCUMENTS IN THE DEPARTMENT OF PUBLIC WORKS AND PLANNING.

SCALE
HORIZ 0 50' 100'

REGISTERED PROFESSIONAL ENGINEER No. 70950 Exp.6/30/27 CIVIL STATE OF CALIFORNIA

Dewberry
DEWBERRY ENGINEERING INC.
575 EAST LOCUST AVENUE SUITE 204
FRESNO, CA 93720

PROJECT
TRAVERS CREEK BRIDGE ON MANNING AVENUE
ROAD NO. S0900 BRIDGE NO. 42C-0687

THE COUNTY OF FRESNO 1856

DEPARTMENT OF PUBLIC WORKS AND PLANNING
STAGE CONSTRUCTION AND TRAFFIC HANDLING PLAN STAGE 1B
DRAWING NO. 11256 SHEET NO. SC-2 TOTAL 62

NOTE:

FOR COMPLETE RIGHT OF WAY AND ACCURATE ACCESS DATA, SEE RIGHT OF WAY RECORD MAPS AT FRESNO COUNTY OFFICE.

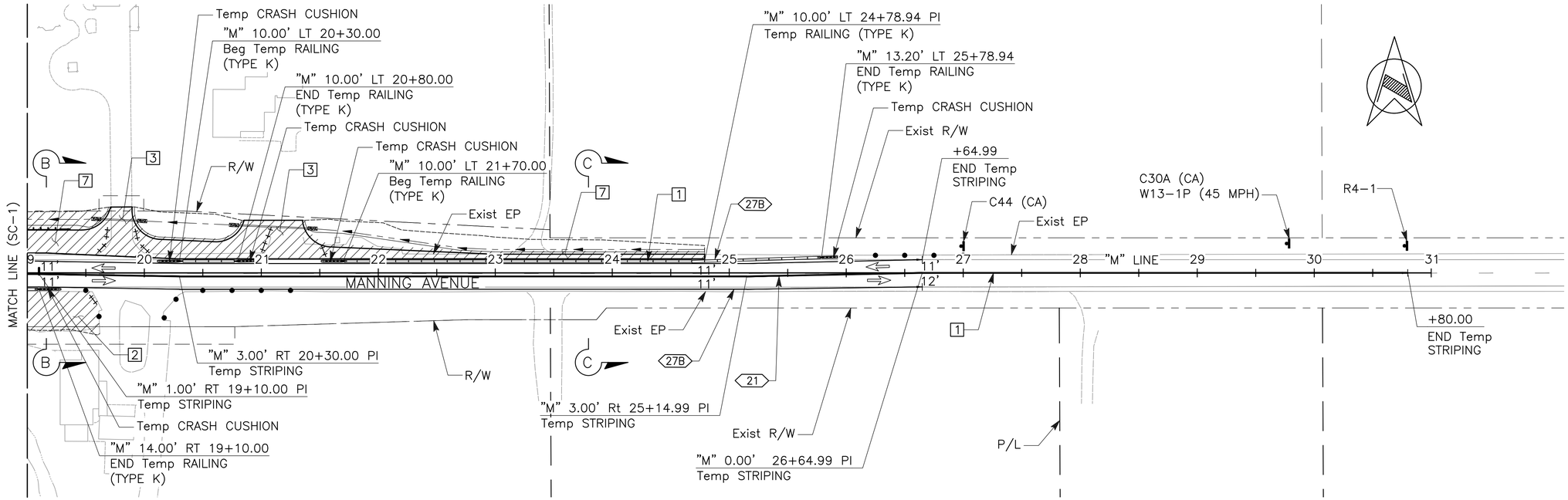

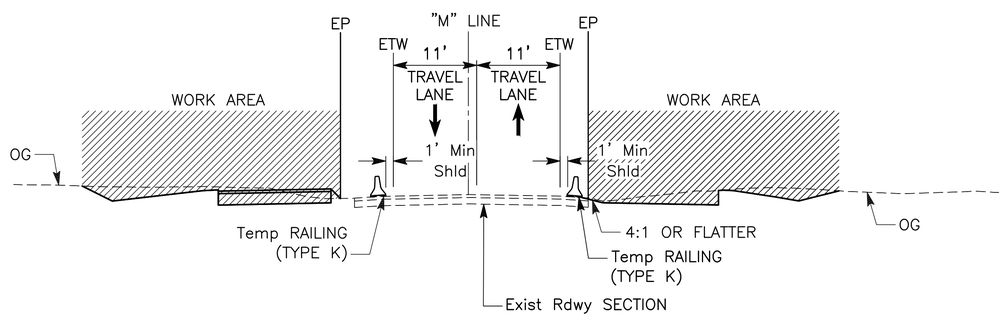

SECTION B–B
NO SCALE

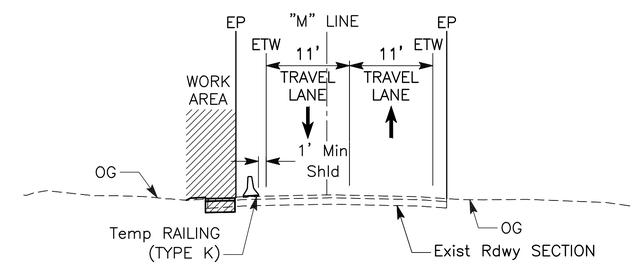

SECTION C–C
NO SCALE

APPROVED FOR STAGE CONSTRUCTION AND TRAFFIC HANDLING WORK ONLY

	DATE	RECORD DRAWING	
DESIGNED: EB	07/07/26	RESIDENT ENGINEER	DATE
DRAWN: CM	07/07/26		
CHECKED: GG	07/07/26		

FOR RIGHT OF WAY DATA AND ACCURATE ACCESS DETERMINATION, SEE DOCUMENTS IN THE DEPARTMENT OF PUBLIC WORKS AND PLANNING.

SCALE

HORIZ 0 50' 100'

REGISTERED PROFESSIONAL ENGINEER No. 70950 Exp.6/30/27 CIVIL STATE OF CALIFORNIA

Dewberry
DEWBERRY ENGINEERING INC.
575 EAST LOCUST AVENUE SUITE 204
FRESNO, CA 93720

PROJECT
TRAVERS CREEK BRIDGE ON MANNING AVENUE

ROAD NO. S0900 BRIDGE NO. 42C-0687

THE COUNTY OF FRESNO 1856

DEPARTMENT OF PUBLIC WORKS AND PLANNING
STAGE CONSTRUCTION AND TRAFFIC HANDLING PLAN STAGE 1B

DRAWING NO. 11256 SHEET NO. SC-3 TOTAL 62

LEGEND:

- ROADWAY WORK
- STRUCTURE WORK
- BRIDGE REMOVAL
- TEMPORARY PAVEMENT (0.35' HMA OVER 90% COMPACTED NATIVE MATERIAL)
- TEMPORARY CRASH CUSHION (ABSORB 350 OR EQUIVALENT)
- TYPE III BARRICADE
- DIRECTION OF TRAFFIC
- CHANNELIZER (SURFACE MOUNTED), SPACING 25' Max
- CONSTRUCTION AREA SIGN
- TEMPORARY RAILING (TYPE K)

NOTES:

1. FOR COMPLETE RIGHT OF WAY AND ACCURATE ACCESS DATA, SEE RIGHT OF WAY RECORD MAPS AT FRESNO COUNTY OFFICE.
2. MAINTAIN 11' MINIMUM TRAVEL LANES.
3. MAINTAIN CLEAR LINE OF SIGHT AT DRIVEWAYS.
4. INSTALL TEMPORARY HIGH VISIBILITY FENCE (ESA FENCING) PRIOR TO BEGINNING WORK AND PRIOR TO ANY GROUND DISTURBING ACTIVITIES.
5. ALL TEMPORARY PAVEMENT MARKINGS SHALL BE TEMPORARY PAVEMENT MARKING (PAINT).
6. SIGN LOCATIONS ARE APPROXIMATE. EXACT SIGN LOCATIONS TO BE DETERMINED BY THE ENGINEER.
7. CONFLICTING SIGNS TO BE REMOVED OR COVERED DURING CONSTRUCTION AS APPROVED BY THE ENGINEER.
8. FINAL HMA LIFT SHALL BE PLACED DURING LAST STAGE.

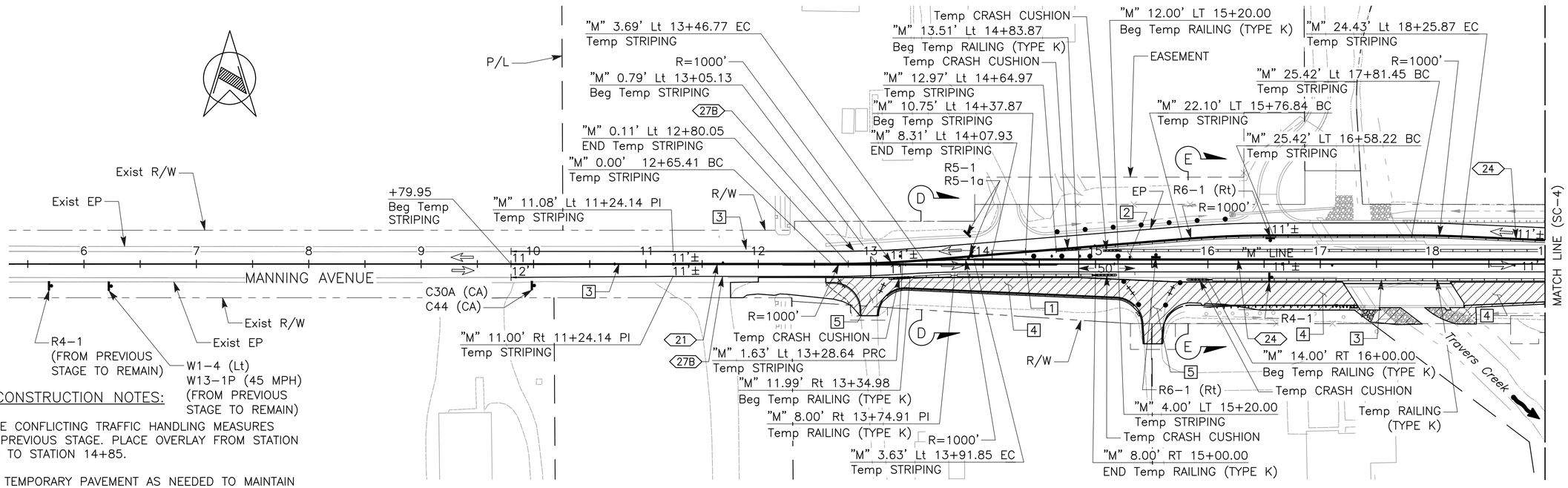

STAGE 2 CONSTRUCTION NOTES:

1. REMOVE CONFLICTING TRAFFIC HANDLING MEASURES FROM PREVIOUS STAGE. PLACE OVERLAY FROM STATION 13+00 TO STATION 14+85.
2. PLACE TEMPORARY PAVEMENT AS NEEDED TO MAINTAIN ACCESS.
3. PLACE TEMPORARY RAILING (TYPE K), TEMPORARY CRASH CUSHIONS, TEMPORARY STRIPING, AND OTHER TRAFFIC HANDLING MEASURES.
4. CONSTRUCT ROADWAY IMPROVEMENTS.
5. CONSTRUCT DRIVEWAY. FEATHER PAVEMENT AS NEEDED TO MAINTAIN DRIVEWAY ACCESS.

STAGE 2 TRAFFIC HANDLING NOTES:

1. SHIFT WESTBOUND MANNING AVENUE TRAFFIC NORTH ONTO NEW BRIDGE AND ROADWAY.
2. MAINTAIN DRIVEWAY ACCESS DURING CONSTRUCTION. CONSOLIDATE DRIVEWAYS AS NEEDED.

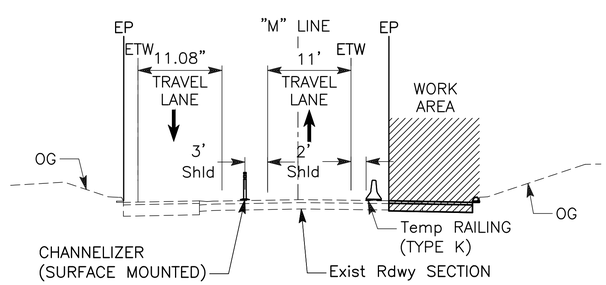

SECTION D-D
NO SCALE

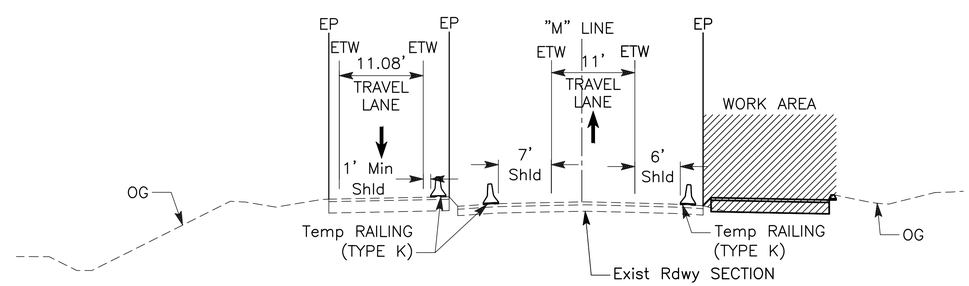

SECTION E-E
NO SCALE

APPROVED FOR STAGE CONSTRUCTION AND TRAFFIC HANDLING WORK ONLY

	DATE	RECORD DRAWING	
DESIGNED: EB	07/07/26	RESIDENT ENGINEER	DATE
DRAWN: CM	07/07/26		
CHECKED: GG	07/07/26		

FOR RIGHT OF WAY DATA AND ACCURATE ACCESS DETERMINATION, SEE DOCUMENTS IN THE DEPARTMENT OF PUBLIC WORKS AND PLANNING.

SCALE: HORIZ 0 50' 100'

REGISTERED PROFESSIONAL ENGINEER No. 70950 Exp.6/30/27 CIVIL STATE OF CALIFORNIA

Dewberry
DEWBERRY ENGINEERING INC.
575 EAST LOCUST AVENUE SUITE 204
FRESNO, CA 93720

PROJECT
TRAVERS CREEK BRIDGE ON MANNING AVENUE
ROAD NO. S0900 BRIDGE NO. 42C-0687

THE COUNTY OF FRESNO 1856

DEPARTMENT OF PUBLIC WORKS AND PLANNING
STAGE CONSTRUCTION AND TRAFFIC HANDLING PLAN STAGE 2
DRAWING NO. 11256 SHEET NO. SC-4 TOTAL 62

NOTE:

FOR COMPLETE RIGHT OF WAY AND ACCURATE ACCESS DATA, SEE RIGHT OF WAY RECORD MAPS AT FRESNO COUNTY OFFICE.

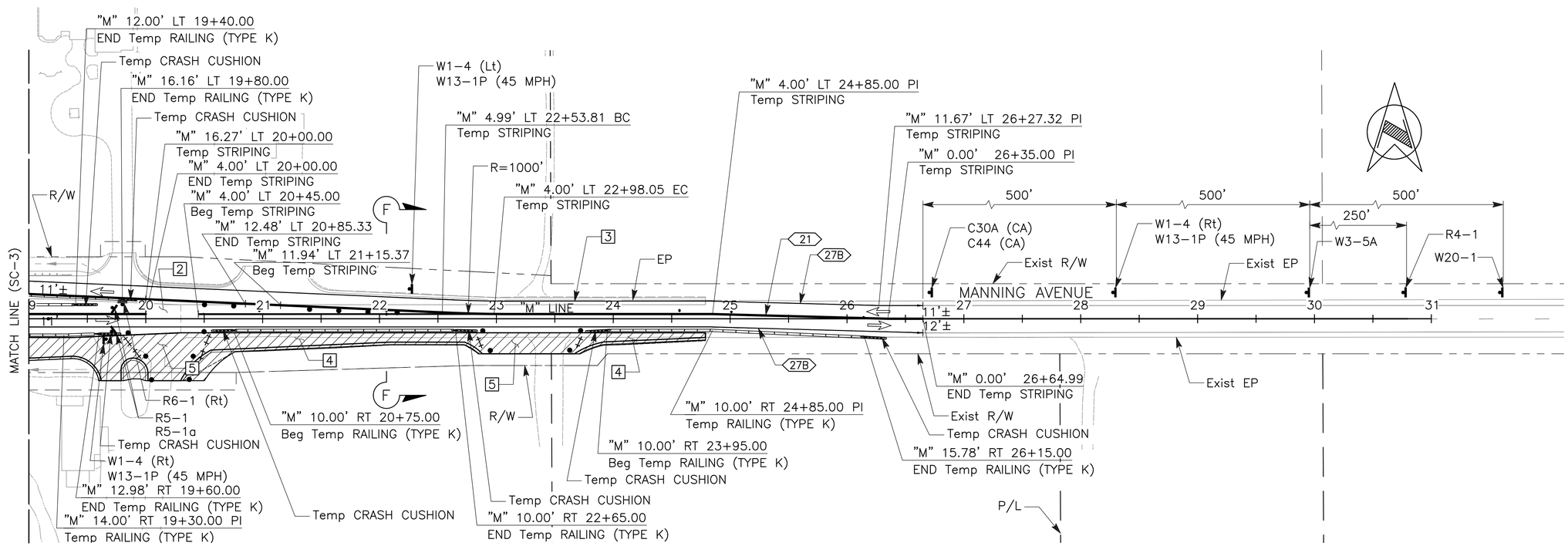

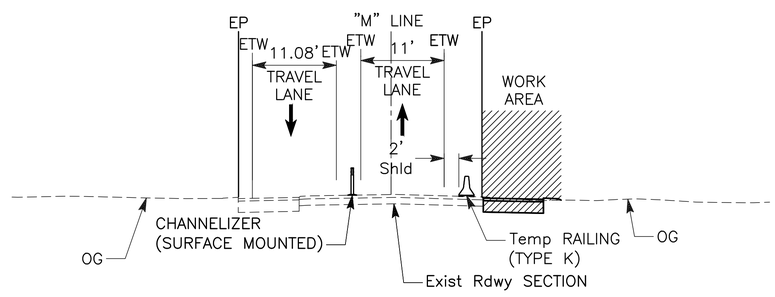

SECTION F-F
NO SCALE

APPROVED FOR STAGE CONSTRUCTION AND TRAFFIC HANDLING WORK ONLY

	DATE	RECORD DRAWING	
DESIGNED: EB	07/07/26	RESIDENT ENGINEER	DATE
DRAWN: CM	07/07/26		
CHECKED: GG	07/07/26		

FOR RIGHT OF WAY DATA AND ACCURATE ACCESS DETERMINATION, SEE DOCUMENTS IN THE DEPARTMENT OF PUBLIC WORKS AND PLANNING.

SCALE

HORIZ 0 50' 100'

REGISTERED PROFESSIONAL ENGINEER No. 70950 Exp.6/30/27 CIVIL STATE OF CALIFORNIA

Dewberry

DEWBERRY ENGINEERING INC.
575 EAST LOCUST AVENUE SUITE 204
FRESNO, CA 93720

PROJECT

TRAVERS CREEK BRIDGE ON MANNING AVENUE

ROAD NO. S0900 BRIDGE NO. 42C-0687

THE COUNTY OF FRESNO 1856

DEPARTMENT OF PUBLIC WORKS AND PLANNING

STAGE CONSTRUCTION AND TRAFFIC HANDLING PLAN STAGE 2

DRAWING NO. 11256 SHEET NO. SC-5 TOTAL 62

LEGEND:

- ROADWAY WORK
- STRUCTURE WORK
- BRIDGE REMOVAL
- TEMPORARY PAVEMENT (0.35' HMA OVER 90% COMPACTED NATIVE MATERIAL)
- TEMPORARY CRASH CUSHION (ABSORB 350 OR EQUIVALENT)
- TYPE III BARRICADE
- DIRECTION OF TRAFFIC
- CHANNELIZER (SURFACE MOUNTED), SPACING 25' Max
- CONSTRUCTION AREA SIGN
- TEMPORARY RAILING (TYPE K)

NOTES:

1. FOR COMPLETE RIGHT OF WAY AND ACCURATE ACCESS DATA, SEE RIGHT OF WAY RECORD MAPS AT FRESNO COUNTY OFFICE.
2. MAINTAIN 11' MINIMUM TRAVEL LANES.
3. MAINTAIN CLEAR LINE OF SIGHT AT DRIVEWAYS.
4. INSTALL TEMPORARY HIGH VISIBILITY FENCE (ESA FENCING) PRIOR TO BEGINNING WORK AND PRIOR TO ANY GROUND DISTURBING ACTIVITIES.
5. ALL TEMPORARY PAVEMENT MARKINGS SHALL BE TEMPORARY PAVEMENT MARKING (PAINT).
6. SIGN LOCATIONS ARE APPROXIMATE. EXACT SIGN LOCATIONS TO BE DETERMINED BY THE ENGINEER.
7. CONFLICTING SIGNS TO BE REMOVED OR COVERED DURING CONSTRUCTION AS APPROVED BY THE ENGINEER.

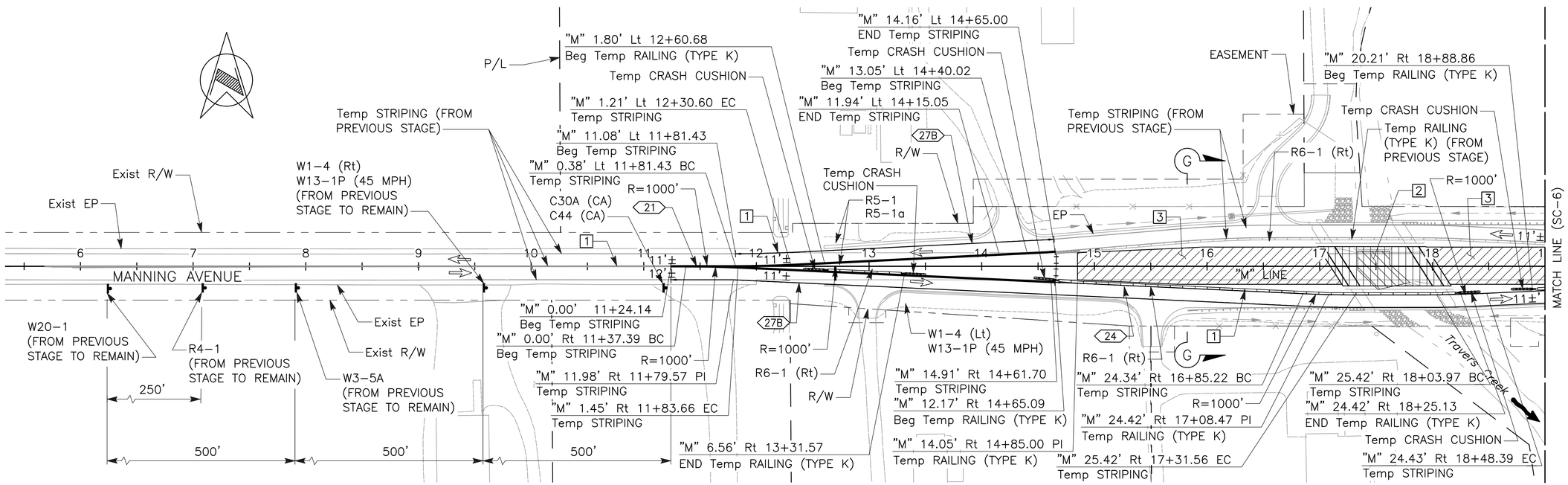

STAGE 3 CONSTRUCTION NOTES:

1. REMOVE CONFLICTING TRAFFIC HANDLING MEASURES FROM PREVIOUS STAGE. PLACE TEMPORARY RAILING (TYPE K), TEMPORARY CRASH CUSHIONS, TEMPORARY STRIPING, AND OTHER TRAFFIC HANDLING MEASURES.
2. REMOVE EXISTING BRIDGE, CONSTRUCT BRIDGE.
3. CONSTRUCT REMAINING ROADWAY IMPROVEMENTS. FEATHER PAVEMENT AND USE TEMPORARY PAVEMENT AS NEEDED TO MAINTAIN TRAFFIC.

STAGE 4 CONSTRUCTION NOTE:

PLACE FINAL HMA LIFT AND OVERLAY UTILIZING FLAGGING AND TWO-WAY REVERSIBLE TRAFFIC CONTROL. PLACE FINAL STRIPING, SEE PAVEMENT DELINEATION AND SIGN PLAN FOR INFORMATION.

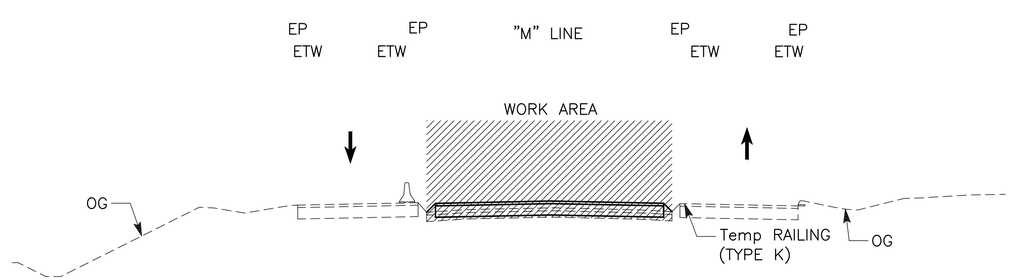

SECTION G-G
NO SCALE

STAGE 3 TRAFFIC HANDLING NOTES:

1. SHIFT EASTBOUND MANNING AVENUE TRAFFIC SOUTH ONTO NEW BRIDGE ROADWAY.
2. MAINTAIN DRIVEWAY ACCESS DURING CONSTRUCTION. CONSOLIDATE DRIVEWAYS AS NEEDED.

STAGE 4 TRAFFIC HANDLING NOTE:

OPEN ALL LANES TO TRAFFIC.

APPROVED FOR STAGE CONSTRUCTION AND TRAFFIC HANDLING WORK ONLY

	DATE	RECORD DRAWING	
DESIGNED: EB	07/07/26	RESIDENT ENGINEER	DATE
DRAWN: CM	07/07/26		
CHECKED: GG	07/07/26		

FOR RIGHT OF WAY DATA AND ACCURATE ACCESS DETERMINATION, SEE DOCUMENTS IN THE DEPARTMENT OF PUBLIC WORKS AND PLANNING.

SCALE
HORIZ 0 50' 100'

REGISTERED PROFESSIONAL ENGINEER No. 70950 Exp. 6/30/27 CIVIL STATE OF CALIFORNIA

Dewberry
DEWBERRY ENGINEERING INC.
575 EAST LOCUST AVENUE SUITE 204
FRESNO, CA 93720

PROJECT
TRAVERS CREEK BRIDGE ON MANNING AVENUE
ROAD NO. S0900 BRIDGE NO. 42C-0687

THE COUNTY OF FRESNO

DEPARTMENT OF PUBLIC WORKS AND PLANNING
STAGE CONSTRUCTION AND TRAFFIC HANDLING PLAN STAGE 3 AND 4
DRAWING NO. 11256 SHEET NO. SC-6 TOTAL 62

NOTE:

FOR COMPLETE RIGHT OF WAY AND ACCURATE ACCESS DATA, SEE RIGHT OF WAY RECORD MAPS AT FRESNO COUNTY OFFICE.

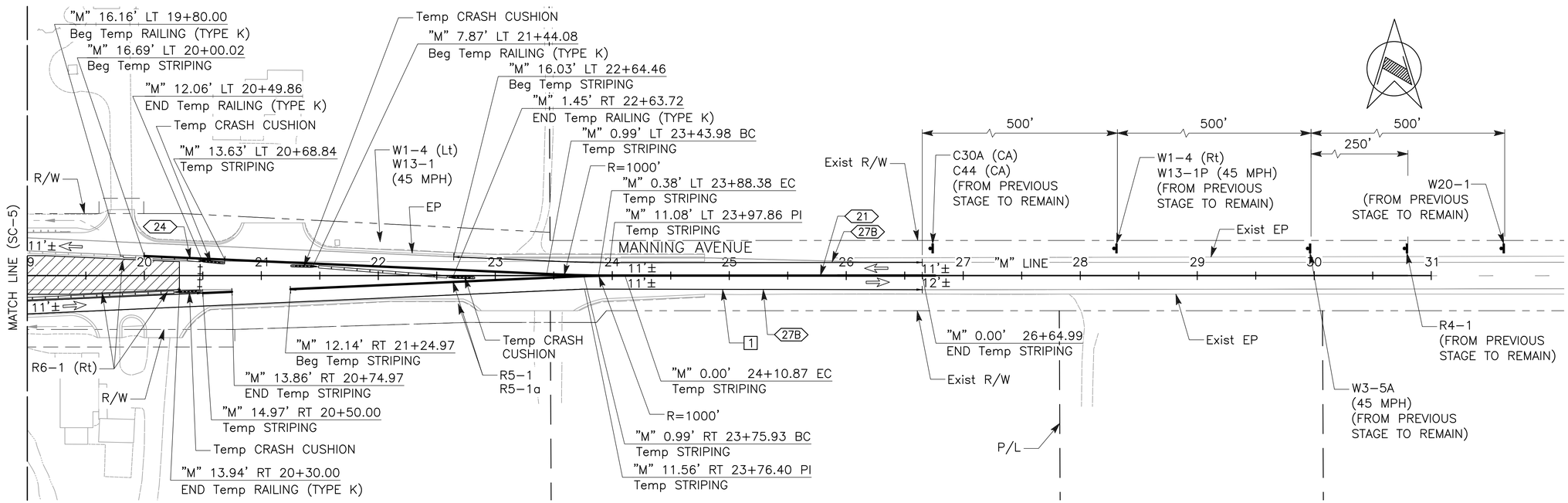

APPROVED FOR STAGE CONSTRUCTION AND TRAFFIC HANDLING WORK ONLY

	DATE	RECORD DRAWING	
DESIGNED: EB	07/07/26	RESIDENT ENGINEER	DATE
DRAWN: CM	07/07/26		
CHECKED: GG	07/07/26		

FOR RIGHT OF WAY DATA AND ACCURATE ACCESS DETERMINATION, SEE DOCUMENTS IN THE DEPARTMENT OF PUBLIC WORKS AND PLANNING.

SCALE

HORIZ 0 50' 100'

REGISTERED PROFESSIONAL ENGINEER No. 70950 Exp.6/30/27 CIVIL STATE OF CALIFORNIA

Dewberry

DEWBERRY ENGINEERING INC.
575 EAST LOCUST AVENUE SUITE 204
FRESNO, CA 93720

PROJECT

TRAVERS CREEK BRIDGE ON MANNING AVENUE

ROAD NO. S0900 BRIDGE NO. 42C-0687

THE COUNTY OF FRESNO 1856

DEPARTMENT OF PUBLIC WORKS AND PLANNING

STAGE CONSTRUCTION AND TRAFFIC HANDLING PLAN STAGE 3 AND 4

DRAWING NO. 11256 SHEET NO. SC-7 TOTAL 62

NOTES:

1. FOR ALL PAVEMENT STRIPING DETAILS, REFER TO CALTRANS STANDARD PLANS DATED 2023.

LEGEND:

XX	STRIPING DETAIL NUMBER
	BEGIN OR END OF STRIPING DETAIL
	RELOCATE ROADSIDE SIGN – TWO POST
	OBJECT MARKER TYPE L–1 (CA)
	OBJECT MARKER TYPE P (CA) (MOUNTED TO GUARDRAIL NOSE)

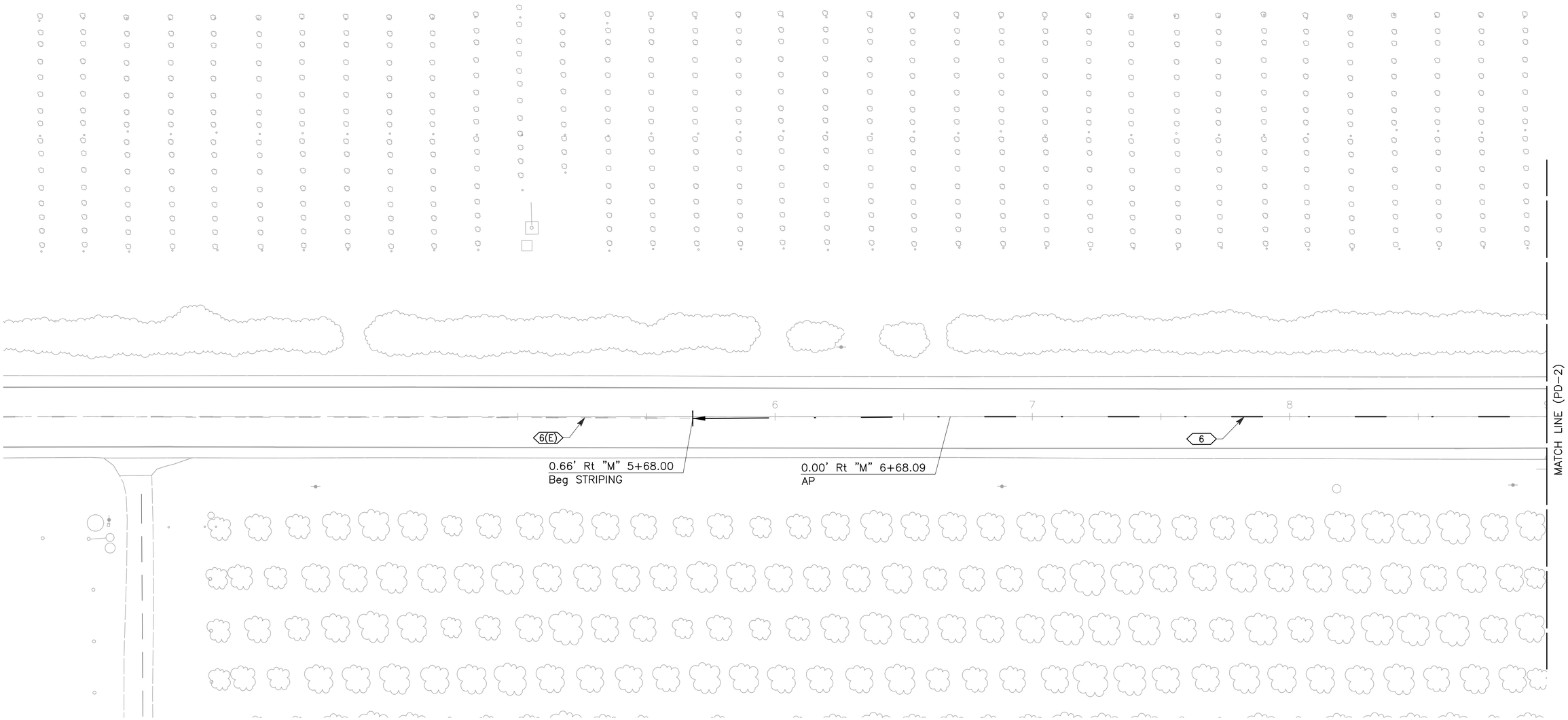

APPROVED FOR PAVEMENT DELINEATION AND SIGN WORK ONLY

	DATE	RECORD DRAWING	
DESIGNED: EB	07/07/26	RESIDENT ENGINEER	DATE
DRAWN: CM	07/07/26		
CHECKED: GG	07/07/26		

FOR RIGHT OF WAY DATA AND ACCURATE ACCESS DETERMINATION, SEE DOCUMENTS IN THE DEPARTMENT OF PUBLIC WORKS AND PLANNING.

SCALE

HORIZ 0 20' 40'

REGISTERED PROFESSIONAL ENGINEER No. 70950 Exp.6/30/27 CIVIL STATE OF CALIFORNIA

Dewberry

DEWBERRY ENGINEERING INC.
575 EAST LOCUST AVENUE SUITE 204
FRESNO, CA 93720

PROJECT

TRAVERS CREEK BRIDGE ON MANNING AVENUE

ROAD NO. S0900 BRIDGE NO. 42C-0687

THE COUNTY OF FRESNO 1856

DEPARTMENT OF PUBLIC WORKS AND PLANNING

PAVEMENT DELINEATION AND SIGN PLANS

DRAWING NO. 11256 SHEET NO. PD-1 TOTAL 62

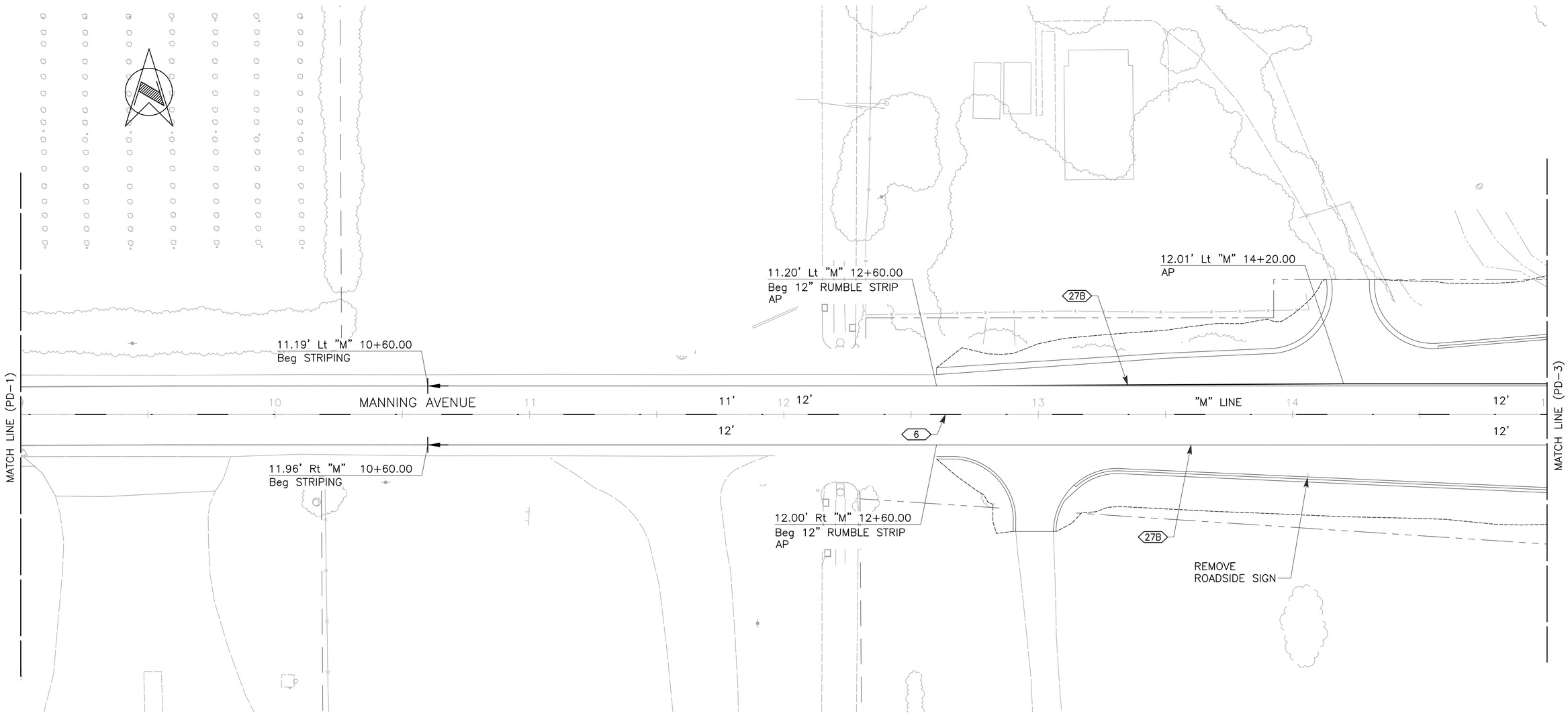

APPROVED FOR PAVEMENT DELINEATION AND SIGN WORK ONLY

	DATE	RECORD DRAWING	
DESIGNED: EB	07/07/26	RESIDENT ENGINEER	DATE
DRAWN: CM	07/07/26		
CHECKED: GG	07/07/26		

FOR RIGHT OF WAY DATA AND ACCURATE ACCESS DETERMINATION, SEE DOCUMENTS IN THE DEPARTMENT OF PUBLIC WORKS AND PLANNING.

SCALE

HORIZ 0 20' 40'

REGISTERED PROFESSIONAL ENGINEER
No. 70950
Exp.6/30/27
CIVIL
STATE OF CALIFORNIA

Dewberry

DEWBERRY ENGINEERING INC.
575 EAST LOCUST AVENUE SUITE 204
FRESNO, CA 93720

PROJECT

TRAVERS CREEK BRIDGE ON
MANNING AVENUE

ROAD NO. S0900 BRIDGE NO. 42C-0687

THE COUNTY OF FRESNO 1856

DEPARTMENT OF PUBLIC WORKS AND PLANNING

PAVEMENT DELINEATION AND SIGN PLANS

DRAWING NO. 11256 SHEET NO. PD-2 TOTAL 62

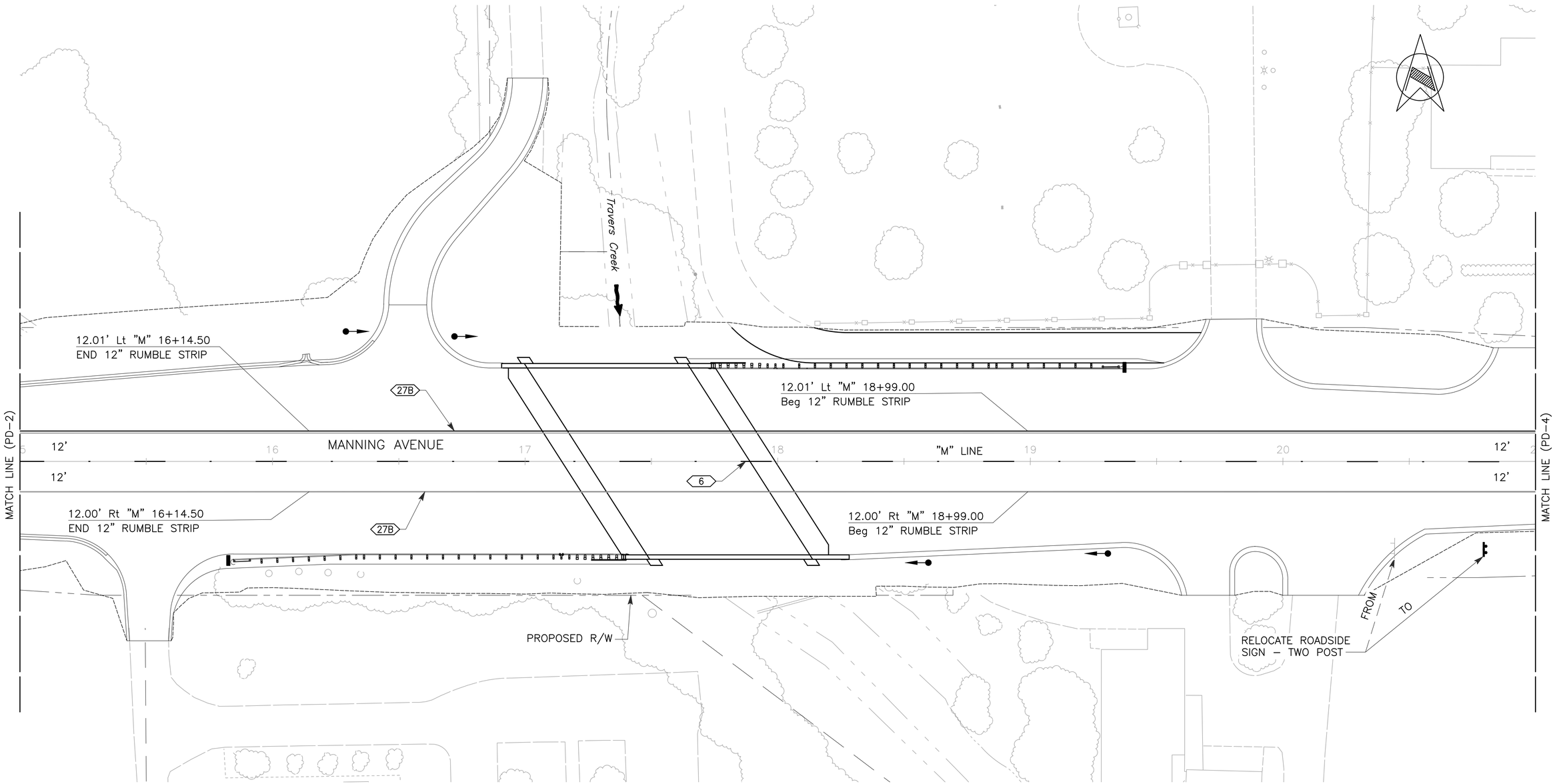

APPROVED FOR PAVEMENT DELINEATION AND SIGN WORK ONLY

	DATE	RECORD DRAWING	
DESIGNED: EB	07/07/26	RESIDENT ENGINEER	DATE
DRAWN: CM	07/07/26		
CHECKED: GG	07/07/26		

FOR RIGHT OF WAY DATA AND ACCURATE ACCESS DETERMINATION, SEE DOCUMENTS IN THE DEPARTMENT OF PUBLIC WORKS AND PLANNING.

SCALE

HORIZ 0 20' 40'

REGISTERED PROFESSIONAL ENGINEER No. 70950 Exp.6/30/27 CIVIL STATE OF CALIFORNIA

Dewberry

DEWBERRY ENGINEERING INC.
575 EAST LOCUST AVENUE SUITE 204
FRESNO, CA 93720

PROJECT

TRAVERS CREEK BRIDGE ON MANNING AVENUE

ROAD NO. S0900 BRIDGE NO. 42C-0687

THE COUNTY OF FRESNO 1856

DEPARTMENT OF PUBLIC WORKS AND PLANNING

PAVEMENT DELINEATION AND SIGN PLANS

DRAWING NO. 11256 SHEET NO. PD-3 TOTAL 62

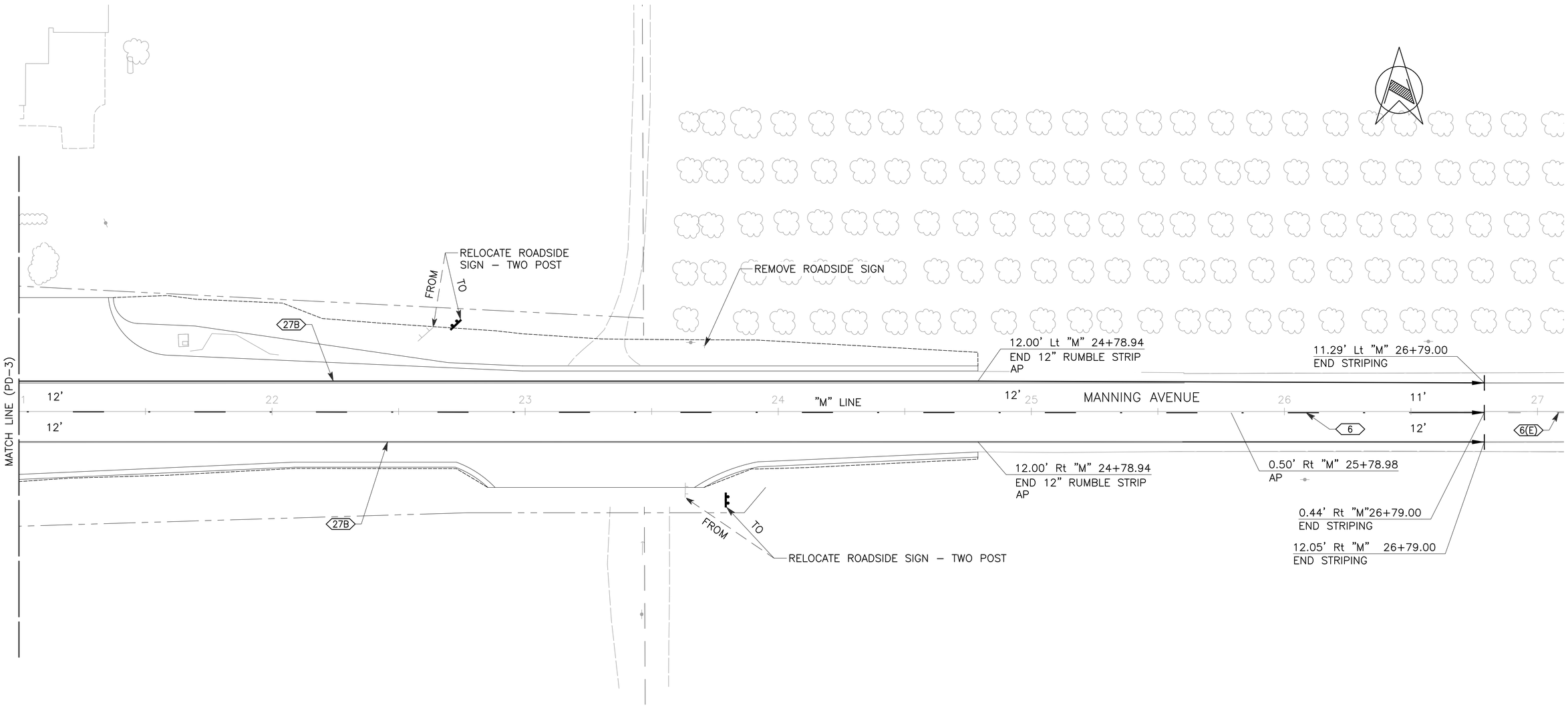

APPROVED FOR PAVEMENT DELINEATION AND SIGN WORK ONLY

	DATE	RECORD DRAWING	
DESIGNED: EB	07/07/26	RESIDENT ENGINEER	DATE
DRAWN: CM	07/07/26		
CHECKED: GG	07/07/26		

FOR RIGHT OF WAY DATA AND ACCURATE ACCESS DETERMINATION, SEE DOCUMENTS IN THE DEPARTMENT OF PUBLIC WORKS AND PLANNING.

SCALE

HORIZ 0 20' 40'

REGISTERED PROFESSIONAL ENGINEER No. 70950 Exp.6/30/27 CIVIL STATE OF CALIFORNIA

Dewberry

DEWBERRY ENGINEERING INC.
575 EAST LOCUST AVENUE SUITE 204
FRESNO, CA 93720

PROJECT

TRAVERS CREEK BRIDGE ON MANNING AVENUE

ROAD NO. S0900 BRIDGE NO. 42C-0687

THE COUNTY OF FRESNO 1856

DEPARTMENT OF PUBLIC WORKS AND PLANNING

PAVEMENT DELINEATION AND SIGN PLANS

DRAWING NO. 11256 SHEET NO. PD-4 TOTAL 62

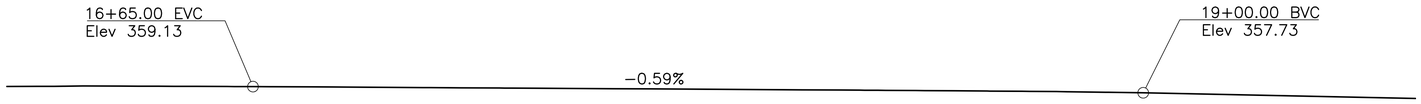

PROFILE GRADE

NO SCALE

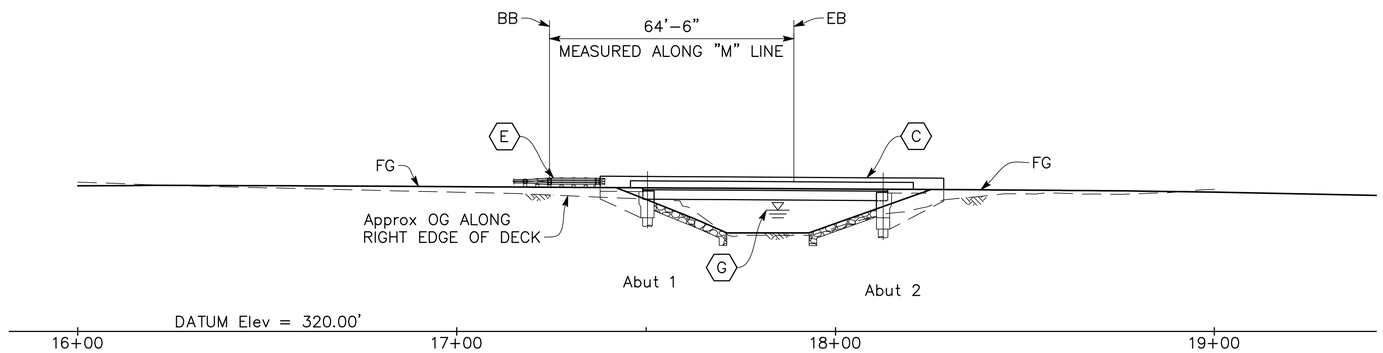

ELEVATION

1" = 20'

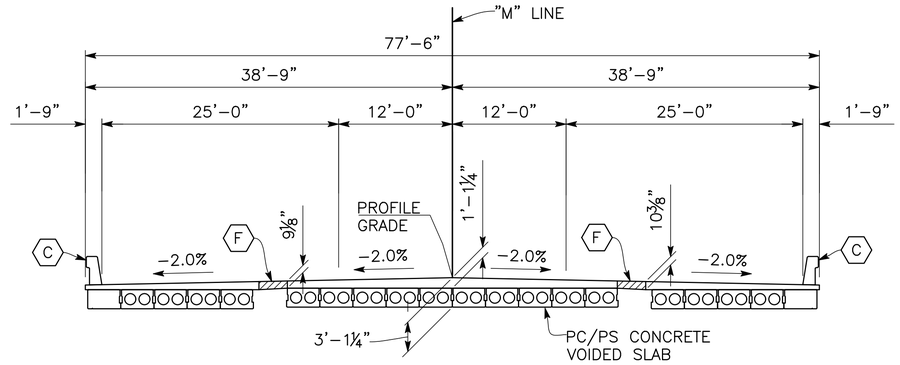

TYPICAL SECTION

⅛" = 1'−0"

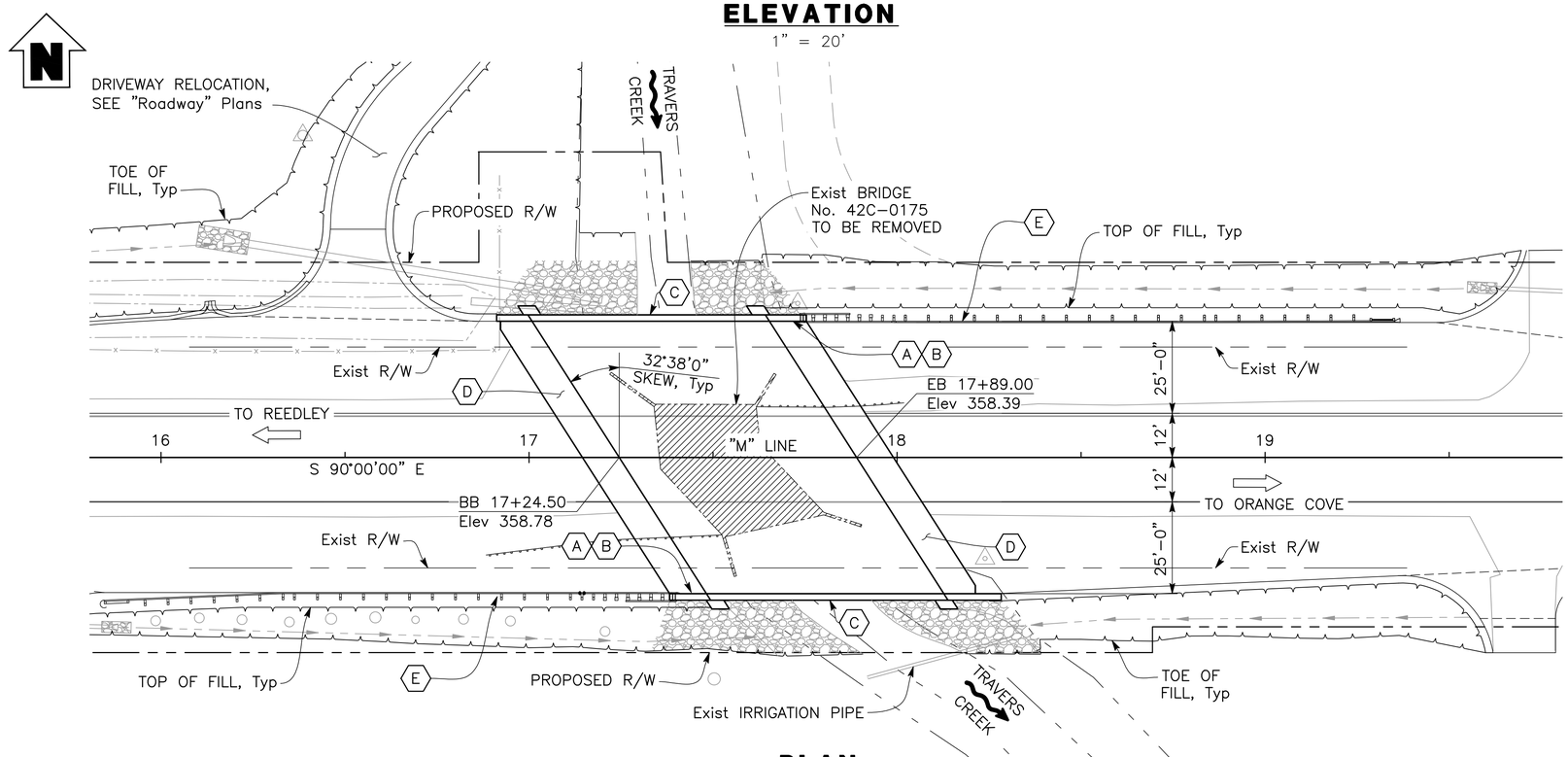

PLAN

1" = 20'

KEY NOTES:

- (A) Paint "Travers Creek Bridge"
- (B) Paint "Bridge No. 42C0687 FCBN: 10−103" and "Year Constructed"
- (C) Concrete Barrier Type 836
- (D) Structure Approach Slab, Type EQ (10)
- (E) MGS, see Roadway Plans
- (F) Closure Pour
- (G) For "HYDRAULIC SUMMARY" see "FOUNDATION PLAN" sheet

NOTES:

1. For the location of "GENERAL NOTES", "QUANTITIES" and "INDEX TO PLANS" see the "INDEX TO PLANS" sheet.
2. For "PILE DATE TABLE", see "FOUNDATION PLAN" sheet.

LEGEND:

- Indicates direction of water flow
- Indicates direction of traffic
- Indicates Existing Bridge
- Indicates New Structure
- Indicates Rock Slope Protection, see Roadway Plans
- Indicates 100 Yr Water Surface Elevation = 354.1'

	DATE	RECORD DRAWING	
DESIGNED: F. CASIMIRO	7/6/26	RESIDENT ENGINEER	DATE
DRAWN: E. CISNEROS	7/6/26		
CHECKED: T. DUBOVIK	7/6/26		

FOR RIGHT OF WAY DATA AND ACCURATE ACCESS DETERMINATION, SEE DOCUMENTS IN THE DEPARTMENT OF PUBLIC WORKS AND PLANNING.

SCALE: AS SHOWN

REGISTERED PROFESSIONAL ENGINEER — MICHAEL A. PUGH — No. C047110 — Exp. 03/31/26 — CIVIL — STATE OF CALIFORNIA

Dewberry
DEWBERRY ENGINEERING INC.
11060 WHITE ROCK ROAD SUITE 200
RANCHO CORDOVA, CA 95670

PROJECT: TRAVERS CREEK BRIDGE ON MANNING AVENUE

ROAD NO. S0900 BRIDGE NO. 42C-0687

THE COUNTY OF FRESNO 1856

DEPARTMENT OF PUBLIC WORKS AND PLANNING

GENERAL PLAN

DRAWING NO. 11256 SHEET NO. ST-1 TOTAL 62

FILE => U:\13017 – Manning Avenue over Travers Creek Bridge – sub BOA\400 Project Design Files\430 Bridges & Structures\Plans\TC-S-GP.dwg

INDEX TO PLANS

SHEET NO.	TITLE
ST–1	GENERAL PLAN
ST–2	INDEX TO PLANS
ST–3	DECK CONTOURS
ST–4	FOUNDATION PLAN
ST–5	STAGED CONSTRUCTION
ST–6	ABUTMENT 1 LAYOUT
ST–7	ABUTMENT 2 LAYOUT
ST–8	ABUTMENT DETAILS NO. 1
ST–9	ABUTMENT DETAILS NO. 2
ST–10	ABUTMENT DETAILS NO. 3
ST–11	ABUTMENT DETAILS NO. 4
ST–12	ABUTMENT DETAILS NO. 5
ST–13	ABUTMENT DETAILS NO. 6
ST–14	TYPICAL SECTION
ST–15	PRECAST SLAB LAYOUT
ST–16	PRECAST SLAB DETAILS NO. 1
ST–17	PRECAST SLAB DETAILS NO. 2
ST–18	PRECAST SLAB DETAILS NO. 3
ST–19	PRECAST SLAB DETAILS NO. 4
ST–20	STRUCTURE APPROACH DETAILS
ST–21	LOG OF TEST BORINGS

CALTRANS STANDARD PLANS DATED 2023

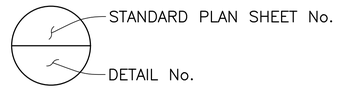

QUANTITIES

BID ITEM	QTY	UNIT
STRUCTURE EXCAVATION (BRIDGE)	252	CY
STRUCTURE BACKFILL (BRIDGE)	81	CY
30" CAST–IN–DRILLED–HOLE CONCRETE PILING	1097	LF
STRUCTURAL CONCRETE, BRIDGE	176	CY
STRUCTURAL CONCRETE, BRIDGE (POLYMER FIBER)	170	CY
STRUCTURAL CONCRETE, APPROACH SLAB TYPE EQ (10)	67	CY
FURNISH PRECAST PRESTRESSED CONCRETE DECK UNIT (SLAB TYPE) (60–70')	20	EA
ERECT PRECAST PRESTRESSED CONCRETE DECK UNITS	20	EA
JOINT SEAL (MR = ½")	185	LF
BAR REINFORCING STEEL (BRIDGE)	96941	LB
BRIDGE REMOVAL	1	LS
MISCELLANEOUS METAL (BRIDGE)	5076	LB
CONCRETE BARRIER (TYPE 836)	175	LF

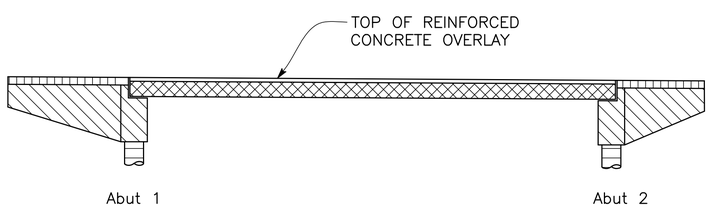

CONCRETE STRENGTH AND TYPE LIMITS

NO SCALE

LEGEND:

- Structural Concrete, Bridge (Polymer Fiber) (f'c = 4000 psi @ 28 days)
- Structural Concrete, Bridge (f'c = 3600 psi @ 28 days)
- Cast–In–Drilled–Hole Concrete Piling (f'c = 4000 psi @ 28 days)
- Precast Prestressed Concrete Slab (See "Precast Slab Details" for strength required)
- Structural Concrete, Approach Slab (f'c = 3600 psi @ 28 days)

GENERAL NOTES
LOAD AND RESISTANCE FACTOR DESIGN

DESIGN: AASHTO LRFD Bridge Design Specifications, 2019 Edition with Caltrans Amendments, updated December 2023

Caltrans Standard Plans and Specifications, 2023 Edition with Revised Standard Plans, dated January 2024

Caltrans Structural Technical Policies as of January 2024

SEISMIC DESIGN: Caltrans Seismic Design Criteria (SDC), Version 2.0 dated April 2019 with Interim revisions dated October 2019.

DEAD LOAD: Includes 35 psf for future wearing surface

LIVE LOADING: HL93 and permit design load.

SEISMIC LOADING: Soil profile: V_{s30} = 1,000 ft/s

Moment Magnitude: 6.6

Peak Ground Acceleration = 0.24g

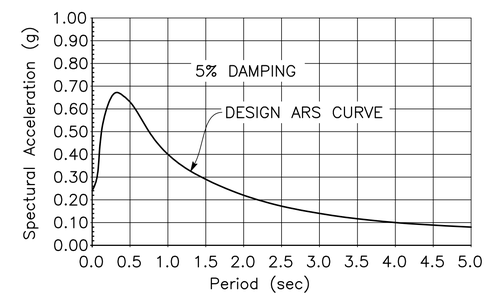

Acceleration Response Spectrum

REINFORCED CONCRETE:
- fy = 60 ksi
- f'c = 3.6 ksi @ 28 days UON, see "CONCRETE STRENGTH AND TYPE LIMITS"
- n = 8

STRUCTURAL STEEL: HSS (Round): ASTM A500, Grade C, fy = 46 ksi

STEEL PIPE: ASTM A53, fy = 35 ksi

ANCHOR RODS: ASTM F1554 GR 36

ANCHOR STUDS: ASTM A108

	DATE	RECORD DRAWING	
DESIGNED: F. CASIMIRO	7/6/26	RESIDENT ENGINEER	DATE
DRAWN: E. CISNEROS	7/6/26		
CHECKED: T. DUBOVIK	7/6/26		

FOR RIGHT OF WAY DATA AND ACCURATE ACCESS DETERMINATION, SEE DOCUMENTS IN THE DEPARTMENT OF PUBLIC WORKS AND PLANNING.

SCALE: AS SHOWN

REGISTERED PROFESSIONAL ENGINEER MICHAEL L. PUGH No. C 37107 Exp. 03/31/26 CIVIL STATE OF CALIFORNIA

Dewberry
DEWBERRY ENGINEERING INC.
11060 WHITE ROCK ROAD SUITE 200
RANCHO CORDOVA, CA 95670

PROJECT: TRAVERS CREEK BRIDGE ON MANNING AVENUE

ROAD NO. S0900 BRIDGE NO. 42C-0687

THE COUNTY OF FRESNO 1856

DEPARTMENT OF PUBLIC WORKS AND PLANNING

INDEX TO PLANS

DRAWING NO. 11256 SHEET NO. ST-2 TOTAL 62

FILE => U:\13017 – Manning Avenue over Travers Creek Bridge – sub BC4\400 Project Design Files\430 Bridges & Structures\Plans\TC-S-IP.dwg

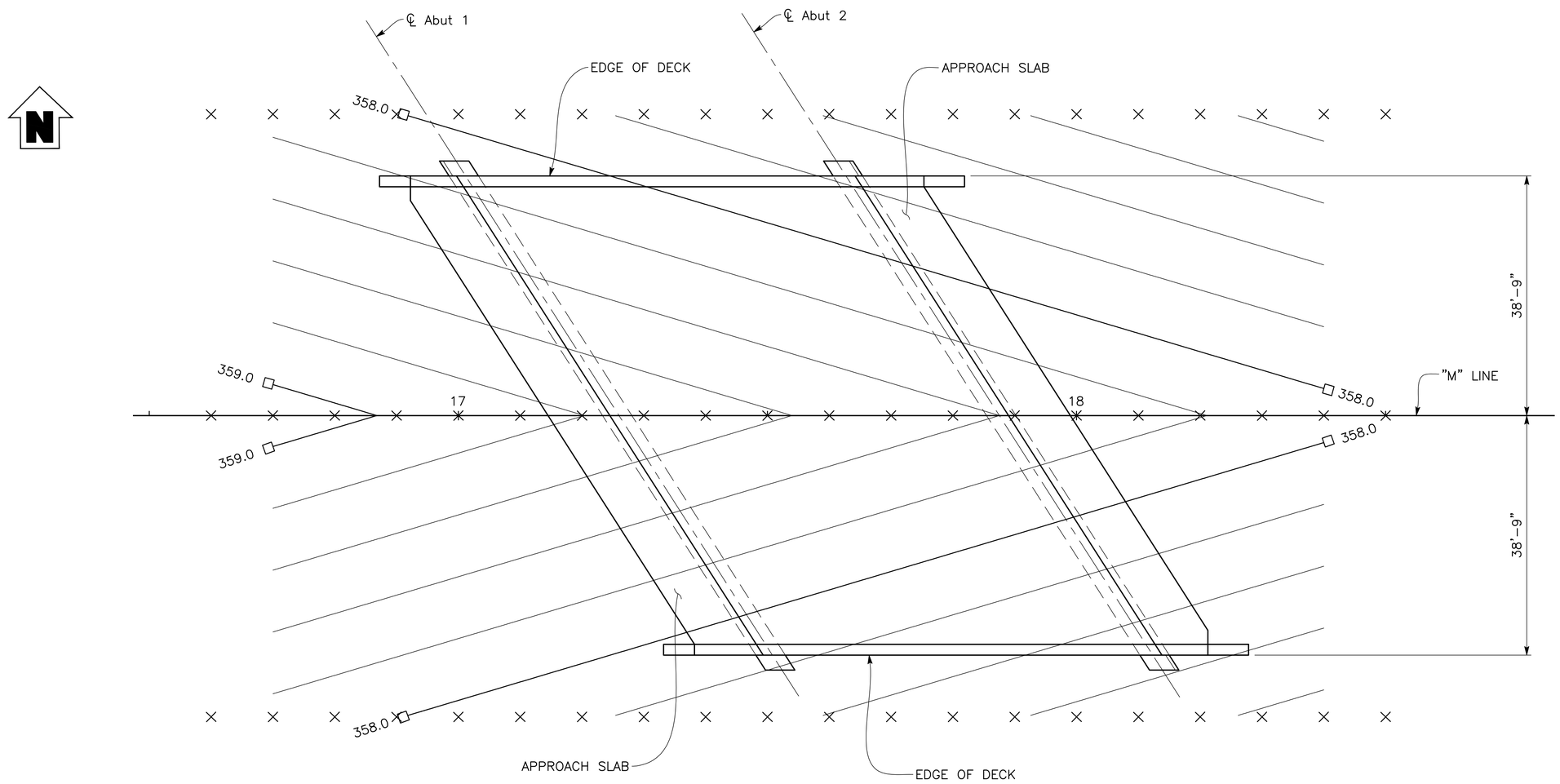

PLAN

1" = 10'

NOTES:

1. Contours do not include Camber.
2. 0.2' Contour Interval.
3. × = Indicates 10' Intervals along "M" Line.
4. □ = Indicates whole foot contour

	DATE	RECORD DRAWING		SCALE
DESIGNED: F. CASIMIRO	7/6/26	RESIDENT ENGINEER	DATE	AS SHOWN
DRAWN: E. CISNEROS	7/6/26			
CHECKED: T. DUBOVIK	7/6/26			

FOR RIGHT OF WAY DATA AND ACCURATE ACCESS DETERMINATION, SEE DOCUMENTS IN THE DEPARTMENT OF PUBLIC WORKS AND PLANNING.

REGISTERED PROFESSIONAL ENGINEER MICHAEL L. PUGH No. C037107-C Exp. 03/31/27 CIVIL STATE OF CALIFORNIA

Dewberry®
DEWBERRY ENGINEERING INC.
11060 WHITE ROCK ROAD SUITE 200
RANCHO CORDOVA, CA 95670

PROJECT
TRAVERS CREEK BRIDGE ON MANNING AVENUE
ROAD NO. S0900 BRIDGE NO. 42C-0687

THE COUNTY OF FRESNO 1856

DEPARTMENT OF PUBLIC WORKS AND PLANNING
DECK CONTOURS
DRAWING NO. 11256 SHEET NO. ST-3 TOTAL 62

FILE => U:\13017 - Manning Avenue over Travers Creek Bridge - sub B04\400 Project Design Files\430 Bridges & Structures\Plans\TC-S-DC.dwg

BENCH MARK AND DATUM				
Monument	Coordinates		Elevation (ft)	Description/ Location
	North	East		
5003	10024.65	12367.36	356.79	"FD FC ⅝" RBR
5004	10041.87	12084.05	357.16	"FD FC ⅝" RBR
5006	9969.10	11738.10	363.56	"FD FC ⅝" RBR
5020	9984.71	12090.66	358.08	FD BM L0119
5021	10017.07	11438.02	358.07	SET 80/D

PILE DATA TABLE					
LOCATION	PILE TYPE	NOMINAL RESISTANCE (kips)		DESIGN TIP ELEVATIONS (ft)	SPECIFIED TIP ELEVATIONS (ft)
		COMPRESSION	TENSION		
Abut 1	30" CIDH	560	N/A	289.0 (a) 319.0 (b)	289.0
Abut 2	30" CIDH	560	N/A	289.0 (a) 319.0 (b)	289.0

PILE NOTES:
1. Design Tip Elevation is controlled by the following demands: (a) Compression, (b) Lateral.
2. The CIDH spacified tip elevation shall not be raised.

HYDROLOGIC SUMMARY		
Drainage Area: 33.9 Square Miles		
Frequency (Years)	Design Flood	Base Flood
	50	100
Discharge (cubic feet per second)	1,090	1,340
Water Surface (elevation at bridge), (feet)	353.3	354.1
Velocity (feet per second)	3.4	3.4

Flood plain data is based upon information available when the plans were prepared and are shown to meet federal requirements. The accuracy of said information is not warranted by the County and interested or affected parties should make their own investigations.

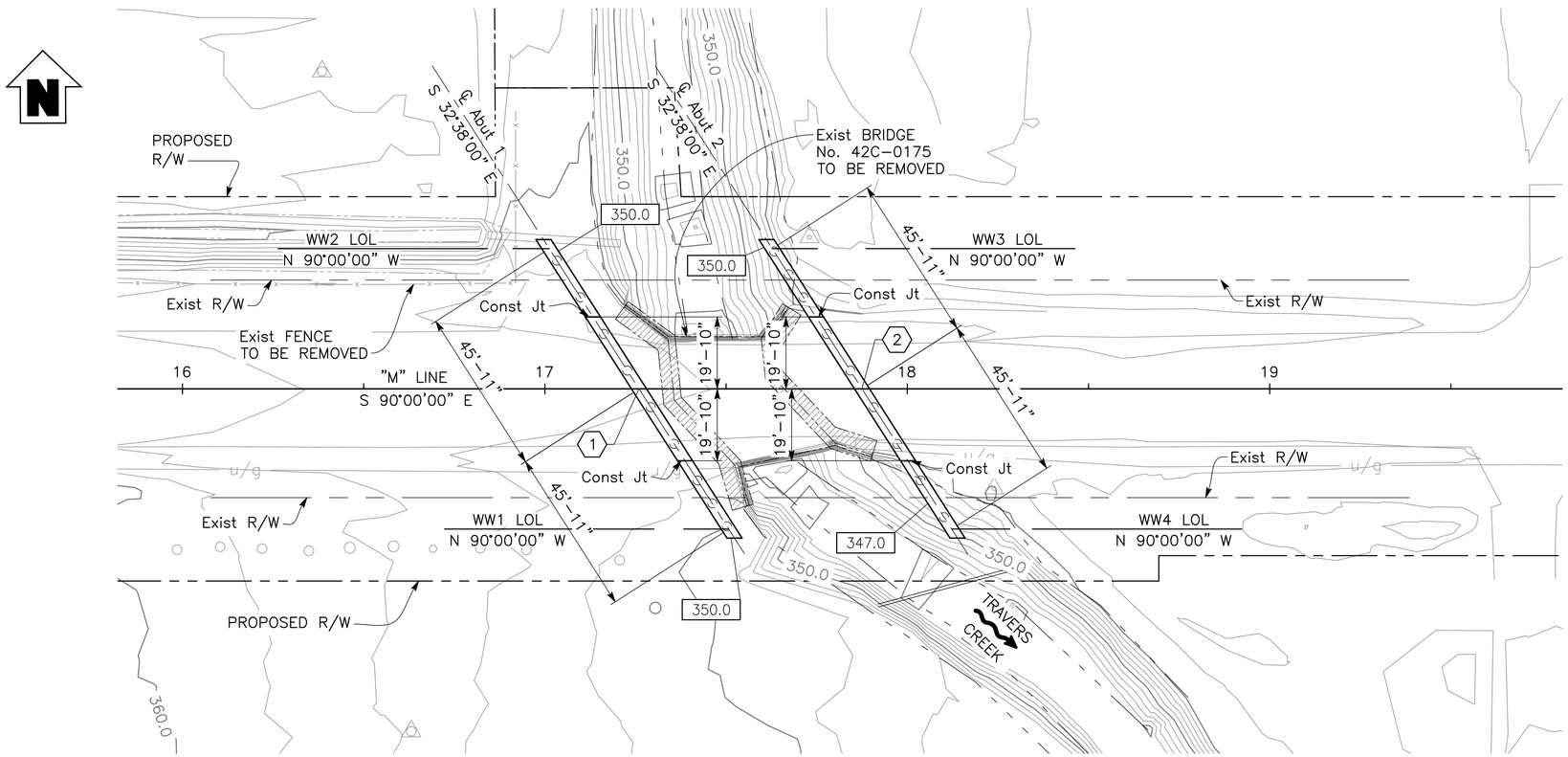

PLAN
1" = 20'

		NORTHING	EASTING
1	℄ Abut 1 Sta 17+25.98	10000.00	12037.04
2	℄ Abut 2 Sta 17+87.52	10000.00	12098.58

SCOUR DATA TABLE		
Support Number	Long Term (Degradation and Contraction) Scour Elevation (ft)	Short Term (Local) Scour Depth (ft)
Abut 1	343	4
Abut 2	343	4

NOTES:

1. The Contractor shall verify that WWLOL matches edge of precast slab considering construction tolerances in precast slab units have been fabricated.
2. For proposed and existing utilities, see "UTILITY PLAN" in Roadway Plans.

LEGEND:

- Indicates Bottom of Footing Elevation
- Indicates Direction of Water Flow
- Indicates Existing Bridge
- Indicates New Structure
- Indicates 30" Dia CIDH Pile

	DATE	RECORD DRAWING	
DESIGNED: F. CASIMIRO	7/6/26	RESIDENT ENGINEER	DATE
DRAWN: E. CISNEROS	7/6/26		
CHECKED: T. DUBOVIK	7/6/26		

FOR RIGHT OF WAY DATA AND ACCURATE ACCESS DETERMINATION, SEE DOCUMENTS IN THE DEPARTMENT OF PUBLIC WORKS AND PLANNING.

SCALE: AS SHOWN

REGISTERED PROFESSIONAL ENGINEER MICHAEL A. PUDDICOMBE No. 74716 Exp. 03/31/26 CIVIL STATE OF CALIFORNIA

Dewberry
DEWBERRY ENGINEERING INC.
11060 WHITE ROCK ROAD SUITE 200
RANCHO CORDOVA, CA 95670

PROJECT: TRAVERS CREEK BRIDGE ON MANNING AVENUE
ROAD NO. S0900 BRIDGE NO. 42C-0687

THE COUNTY OF FRESNO 1856

DEPARTMENT OF PUBLIC WORKS AND PLANNING

FOUNDATION PLAN

DRAWING NO. 11256 SHEET NO. ST-4 TOTAL 62

FILE => U:\13017 - Manning Avenue over Travers Creek Bridge - sub BCA\400 Project Design Files\430 Bridges & Structures\Plans\TC-S-FP.dwg

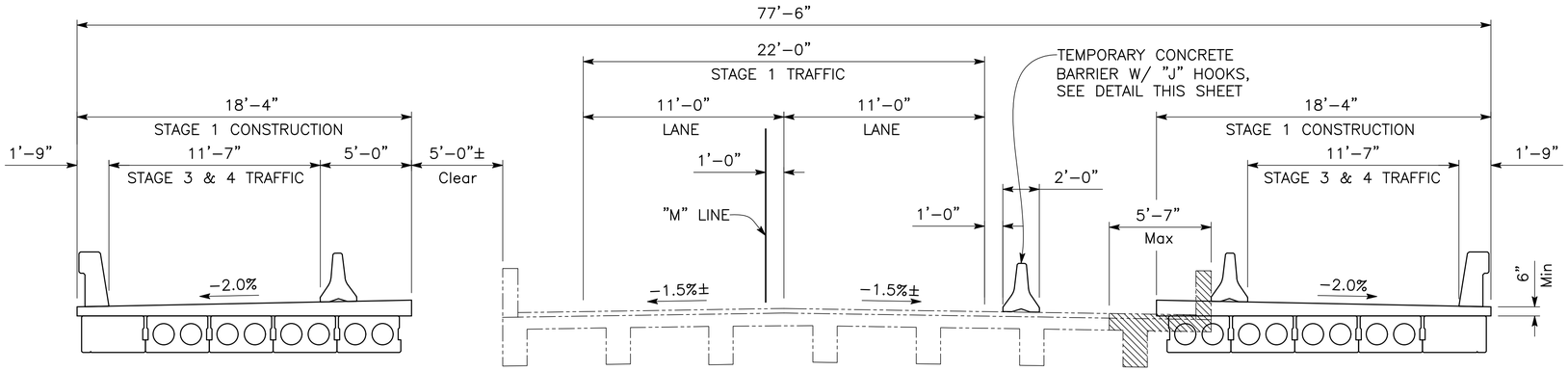

STAGE 1 CONSTRUCTION

¼" = 1'-0"

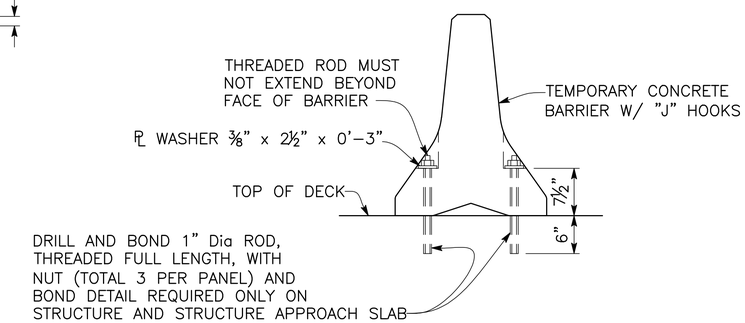

NOTE:
AFTER RAILING REMOVAL, REMOVE THREADED ROD TO A MINIMUM DEPTH OF 1" BELOW CONCRETE DECK SURFACE AND FILL HOLE WITH RAPID SETTING CONCRETE.

TEMPORARY BARRIER WITH "J" HOOKS

1" = 1'-0"

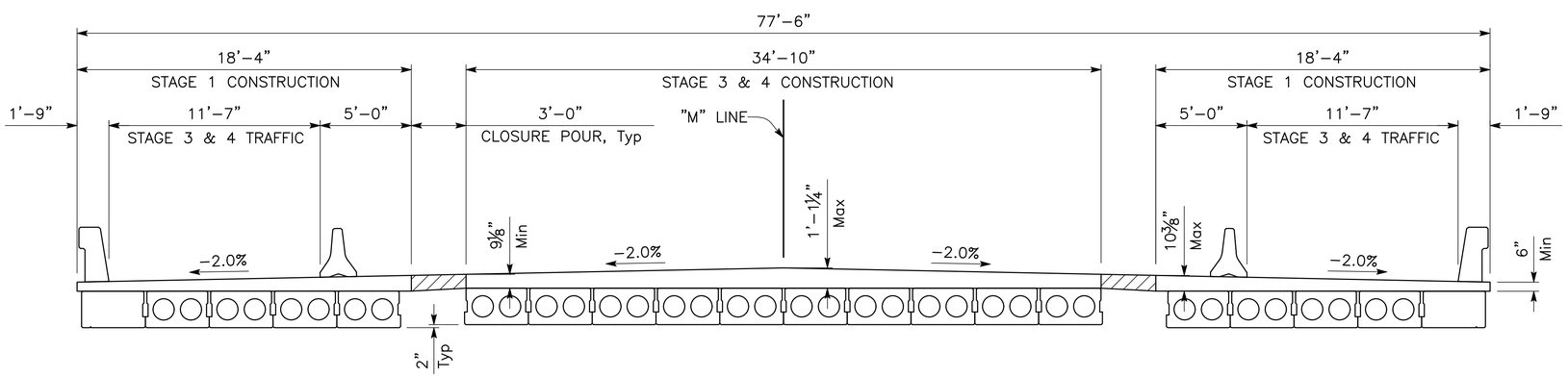

STAGE 3 & 4 CONSTRUCTION

¼" = 1'-0"

LEGEND:

- Indicates Bridge Removal
- Indicates Closure Pour
- Indicates Existing Structure
- Indicates New Structure

	DATE	RECORD DRAWING		SCALE		PROJECT		DEPARTMENT OF PUBLIC WORKS AND PLANNING
DESIGNED: F. CASIMIRO	7/6/26	RESIDENT ENGINEER	DATE	AS SHOWN	Dewberry DEWBERRY ENGINEERING INC. 11060 WHITE ROCK ROAD SUITE 200 RANCHO CORDOVA, CA 95670	TRAVERS CREEK BRIDGE ON MANNING AVENUE	THE COUNTY OF FRESNO 1856	STAGED CONSTRUCTION
DRAWN: E. CISNEROS	7/6/26					ROAD NO. S0900 BRIDGE NO. 42C-0687		DRAWING NO. 11256 SHEET NO. ST-5 TOTAL 62
CHECKED: T. DUBOVIK	7/6/26							

FOR RIGHT OF WAY DATA AND ACCURATE ACCESS DETERMINATION, SEE DOCUMENTS IN THE DEPARTMENT OF PUBLIC WORKS AND PLANNING.

FILE => U:\13017 - Manning Avenue over Travers Creek Bridge - sub BCA\400 Project Design Files\430 Bridges & Structures\Plans\TC-S-SC.dwg

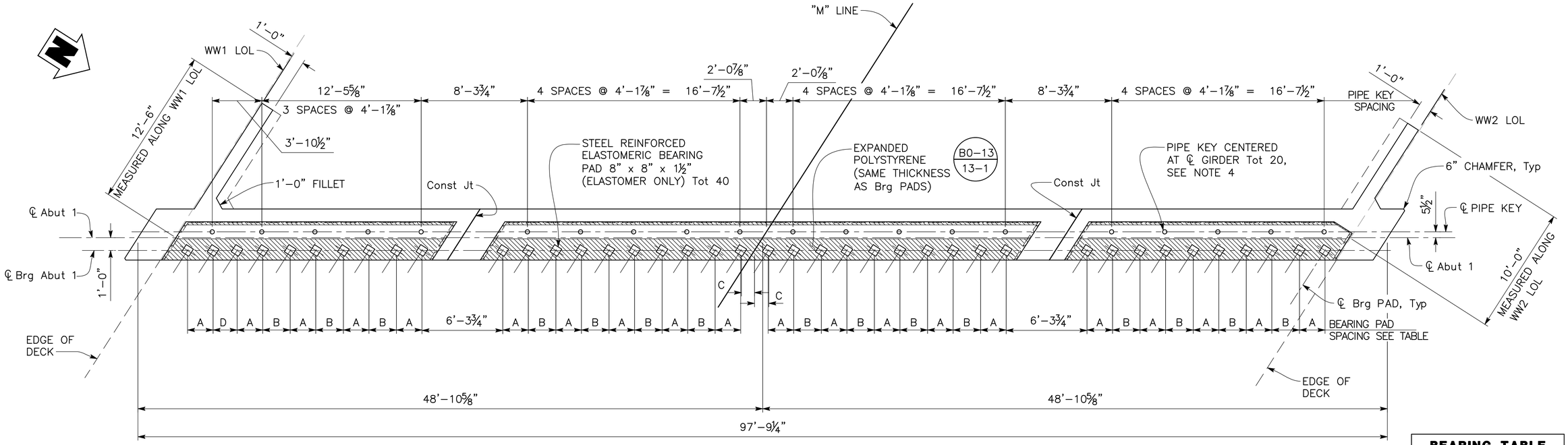

PLAN

¼" = 1'-0"

BEARING TABLE	
A	2'-0"
B	2'-1⅞"
C	1'-0⅞"
D	1-10½"

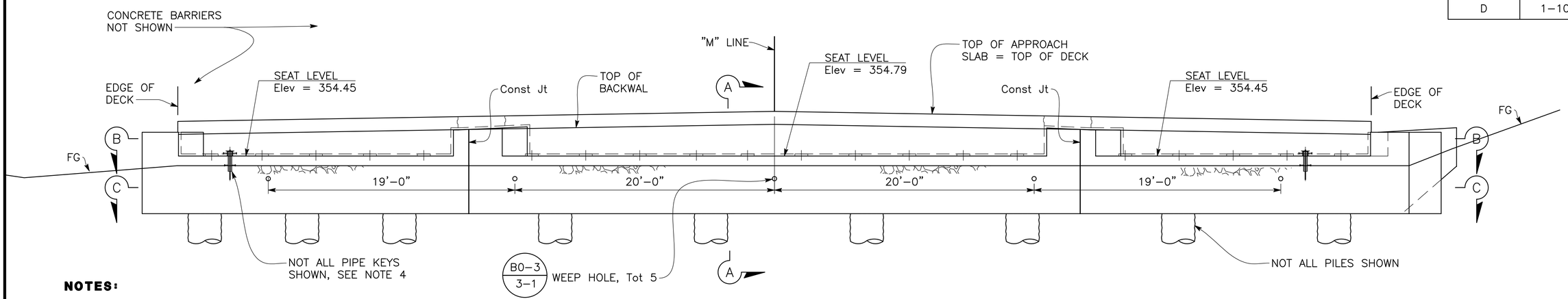

ELEVATION

¼" = 1'-0"

NOTES:

1. For "SECTION A-A", see "ABUTMENT DETAILS NO. 2" sheet.
2. For "SECTION B-B" and "SHEAR KEY DETAILS" see "ABUTMENT DETAILS NO. 3" sheet.
3. For "SECTION C-C" and "BEARING PAD DETAILS", see "ABUTMENT DETAILS NO. 4" sheet.

NOTES:

4. For Abutment Pipe Key Details, see "ABUTMENT DETAILS NO. 6" sheet.
5. For Pile Layout, see "ABUTMENT DETAILS NO. 1" sheet.

	DATE	RECORD DRAWING	
DESIGNED: F. CASIMIRO	7/6/26	RESIDENT ENGINEER	DATE
DRAWN: E. CISNEROS	7/6/26		
CHECKED: T. DUBOVIK	7/6/26		

FOR RIGHT OF WAY DATA AND ACCURATE ACCESS DETERMINATION, SEE DOCUMENTS IN THE DEPARTMENT OF PUBLIC WORKS AND PLANNING.

SCALE: AS SHOWN

REGISTERED PROFESSIONAL ENGINEER MICHAEL A. PUDNEY No. C037710 Exp. 03/31/28 CIVIL STATE OF CALIFORNIA

Dewberry
DEWBERRY ENGINEERING INC.
11060 WHITE ROCK ROAD SUITE 200
RANCHO CORDOVA, CA 95670

PROJECT: TRAVERS CREEK BRIDGE ON MANNING AVENUE

ROAD NO. S0900 BRIDGE NO. 42C-0687

THE COUNTY OF FRESNO 1856

DEPARTMENT OF PUBLIC WORKS AND PLANNING

ABUTMENT 1 LAYOUT

DRAWING NO. 11256 SHEET NO. ST-6 TOTAL 62

FILE => U:\13017 – Manning Avenue over Travers Creek Bridge – sub BGA\400 Project Design Files\430 Bridges & Structures\Plans\TC-S-A1L.dwg

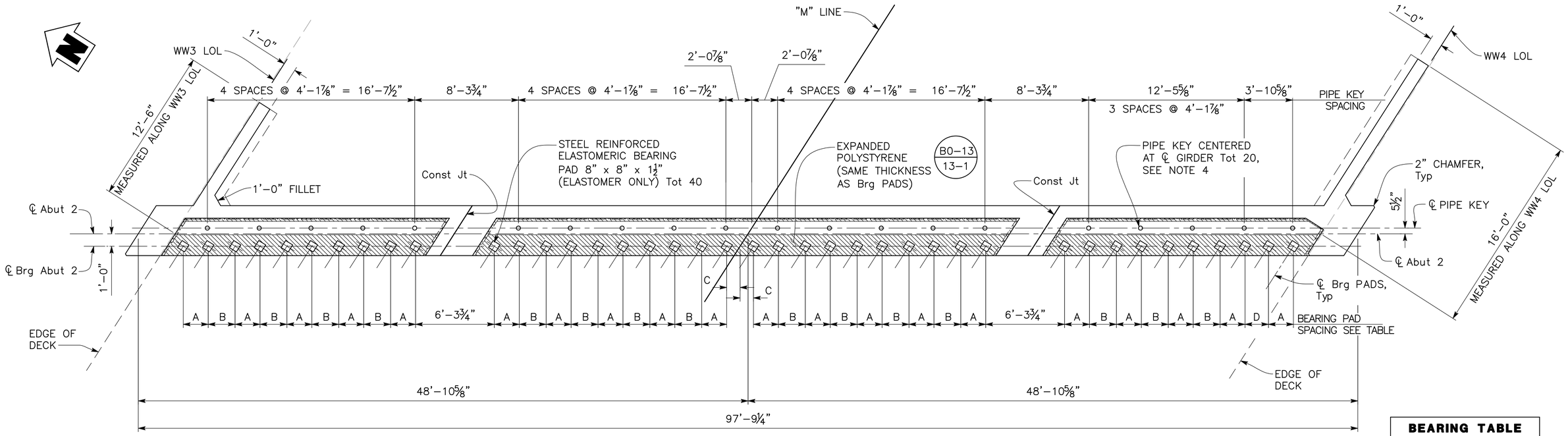

PLAN

¼" = 1'-0"

BEARING TABLE	
A	2'-0"
B	2'-1⅞"
C	1'-0⅞"
D	1'-10½"

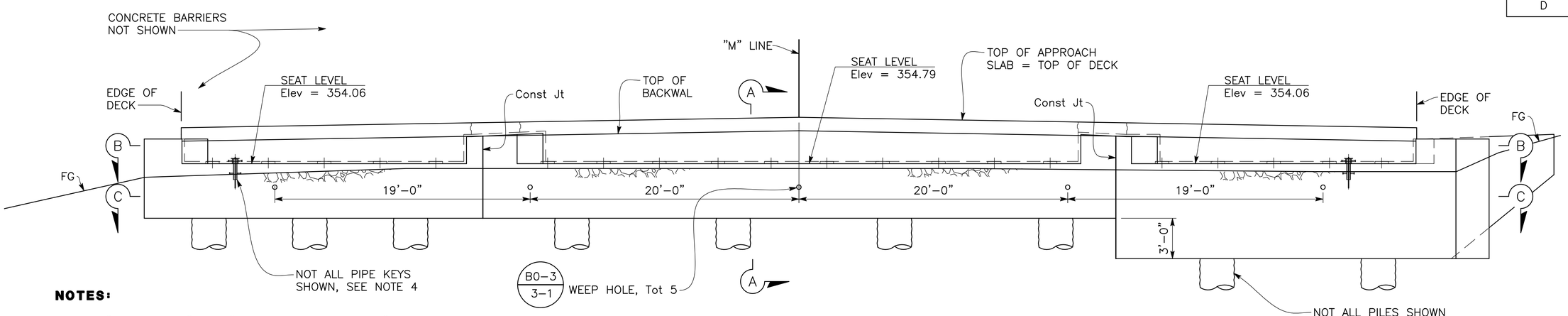

ELEVATION

¼" = 1'-0"

NOTES:

1. For "SECTION A–A", see "ABUTMENT DETAILS NO. 2" sheet.
2. For "SECTION B–B" and "SHEAR KEY DETAILS" see "ABUTMENT DETAILS NO. 3" sheet.
3. For "SECTION C–C" and "BEARING PAD DETAILS", see "ABUTMENT DETAILS NO. 4" sheet.

NOTES:

4. For Abutment Pipe Key Details, see "ABUTMENT DETAILS NO. 6" sheet.
5. For Pile Layout, see "ABUTMENT DETAILS NO. 1" sheet.

	DATE	RECORD DRAWING	DATE
DESIGNED: F. CASIMIRO	7/6/26	RESIDENT ENGINEER	
DRAWN: E. CISNEROS	7/6/26		
CHECKED: T. DUBOVIK	7/6/26		

FOR RIGHT OF WAY DATA AND ACCURATE ACCESS DETERMINATION, SEE DOCUMENTS IN THE DEPARTMENT OF PUBLIC WORKS AND PLANNING.

SCALE: AS SHOWN

REGISTERED PROFESSIONAL ENGINEER MICHAEL A. PUDNEY No. C 43710 Exp. 03/31/28 CIVIL STATE OF CALIFORNIA

Dewberry
DEWBERRY ENGINEERING INC.
11060 WHITE ROCK ROAD SUITE 200
RANCHO CORDOVA, CA 95670

PROJECT: TRAVERS CREEK BRIDGE ON MANNING AVENUE

ROAD NO. S0900 BRIDGE NO. 42C-0687

THE COUNTY OF FRESNO 1856

DEPARTMENT OF PUBLIC WORKS AND PLANNING

ABUTMENT 2 LAYOUT

DRAWING NO. 11256 SHEET NO. ST-7 TOTAL 62

FILE => U:\13017 – Manning Avenue over Travers Creek Bridge – sub BCA\400 Project Design Files\430 Bridges & Structures\Plans\TC-S-A2L.dwg

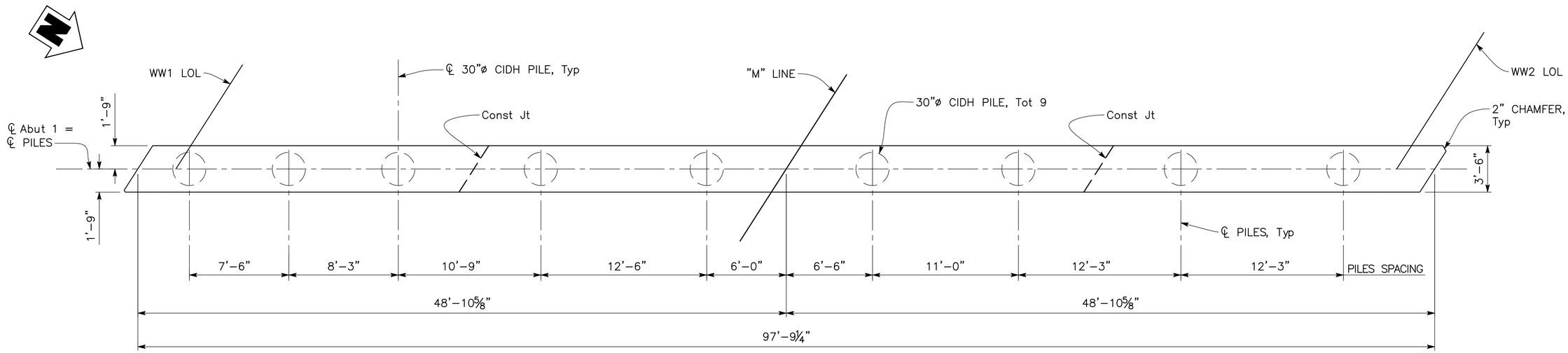

ABUTMENT 1 PILE LAYOUT

¼" = 1'-0"

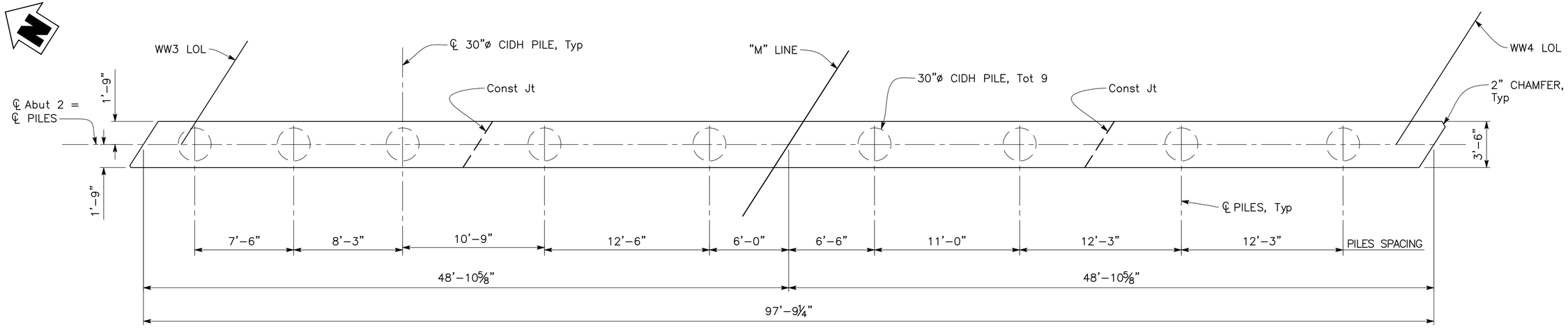

ABUTMENT 2 PILE LAYOUT

¼" = 1'-0"

	DATE	RECORD DRAWING	
DESIGNED: F. CASIMIRO	7/6/26	RESIDENT ENGINEER	DATE
DRAWN: E. CISNEROS	7/6/26		
CHECKED: T. DUBOVIK	7/6/26		

FOR RIGHT OF WAY DATA AND ACCURATE ACCESS DETERMINATION, SEE DOCUMENTS IN THE DEPARTMENT OF PUBLIC WORKS AND PLANNING.

SCALE: AS SHOWN

REGISTERED PROFESSIONAL ENGINEER — MICHAEL A. PUGH — No. 43710 — Exp. 03/31/27 — CIVIL — STATE OF CALIFORNIA

Dewberry
DEWBERRY ENGINEERING INC.
11060 WHITE ROCK ROAD SUITE 200
RANCHO CORDOVA, CA 95670

PROJECT: TRAVERS CREEK BRIDGE ON MANNING AVENUE

ROAD NO. S0900 BRIDGE NO. 42C-0687

THE COUNTY OF FRESNO 1856

DEPARTMENT OF PUBLIC WORKS AND PLANNING

ABUTMENT DETAILS NO. 1

DRAWING NO. 11256 SHEET NO. ST-8 TOTAL 62

FILE => U:\13017 – Manning Avenue over Travers Creek Bridge – sub BC4\400 Project Design Files\430 Bridges & Structures\Plans\TC-S-A01.dwg

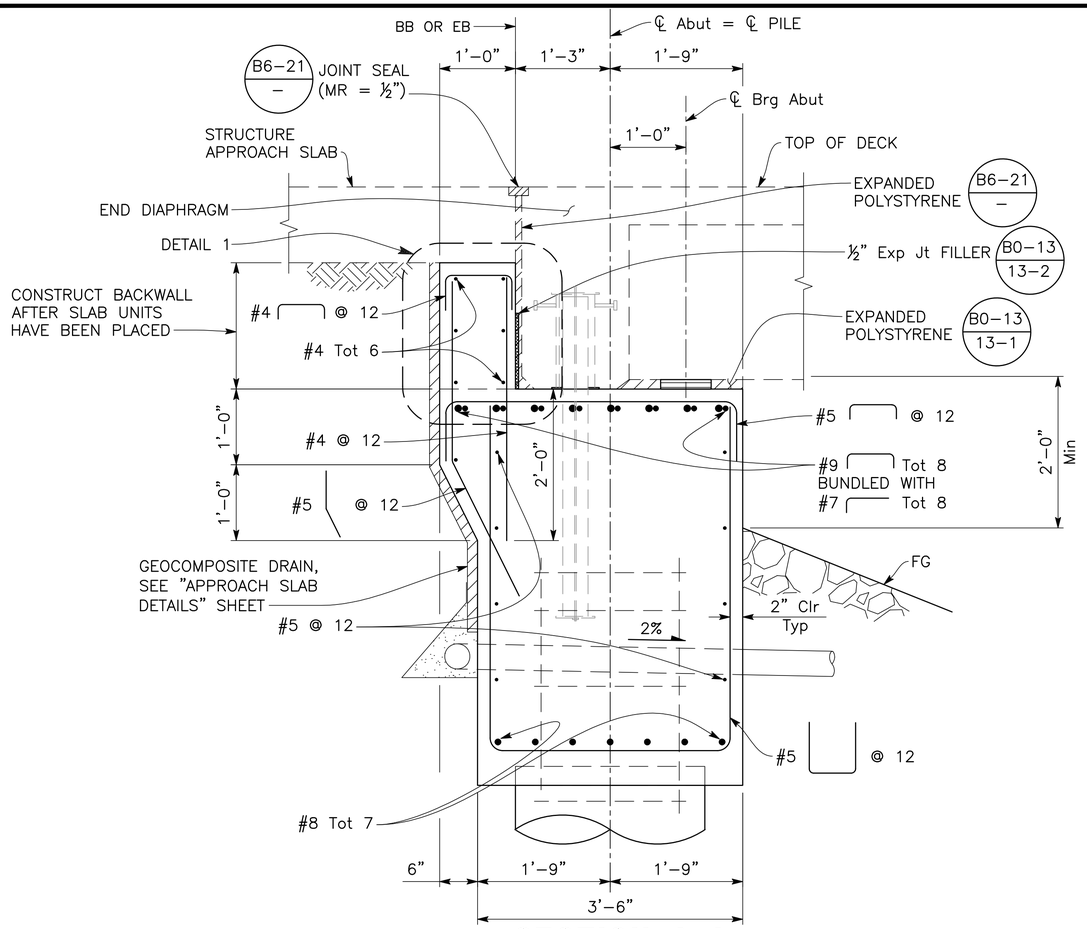

SECTION A-A

1" = 1'-0"

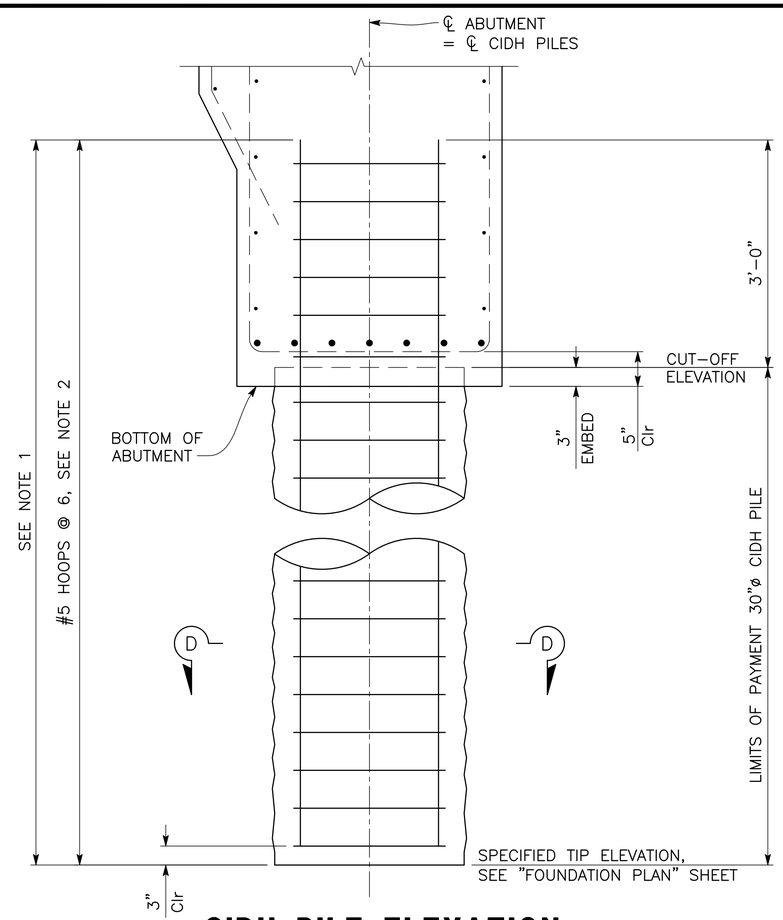

CIDH PILE ELEVATION

1" = 1'-0"'

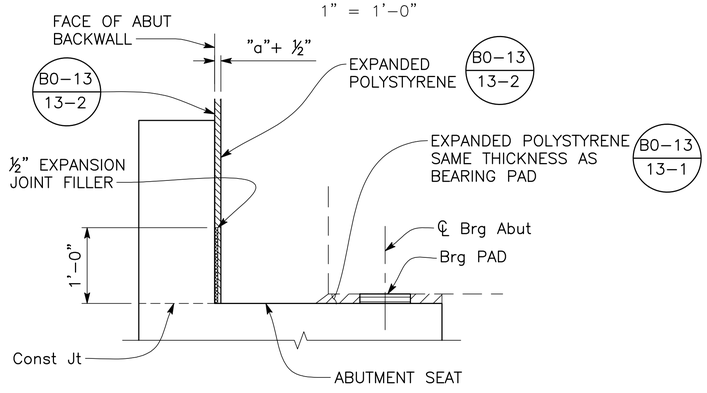

DETAIL 1

1" = 1'-0"

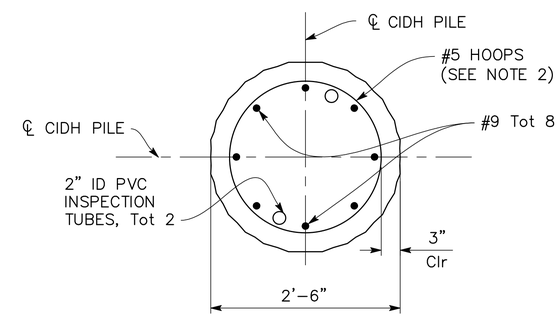

SECTION D-D

1" = 1'-0"

NOTES:

1. No Splices allowed in the pile main CIDH longitudinal reinforcement.
2. All hoops must be "Ultimate" butt spliced continuous.

	DATE	RECORD DRAWING		SCALE
DESIGNED: F. CASIMIRO	7/6/26	RESIDENT ENGINEER	DATE	AS SHOWN
DRAWN: E. CISNEROS	7/6/26			
CHECKED: T. DUBOVIK	7/6/26			

FOR RIGHT OF WAY DATA AND ACCURATE ACCESS DETERMINATION, SEE DOCUMENTS IN THE DEPARTMENT OF PUBLIC WORKS AND PLANNING.

REGISTERED PROFESSIONAL ENGINEER MICHAEL A. PUDDICOMBE C 40710 Exp. 03/31/26 CIVIL STATE OF CALIFORNIA

Dewberry
DEWBERRY ENGINEERING INC.
11060 WHITE ROCK ROAD SUITE 200
RANCHO CORDOVA, CA 95670

PROJECT
TRAVERS CREEK BRIDGE ON
MANNING AVENUE
ROAD NO. S0900 BRIDGE NO. 42C-0687

THE COUNTY OF FRESNO 1856

DEPARTMENT OF PUBLIC WORKS AND PLANNING
ABUTMENT DETAILS NO. 2
DRAWING NO. 11256 SHEET NO. ST-9 TOTAL 62

FILE => U:\13017 – Manning Avenue over Travers Creek Bridge – sub BCA\400 Project Design Files\4.30 Bridges & Structures\Plans\TC-S-A02.dwg

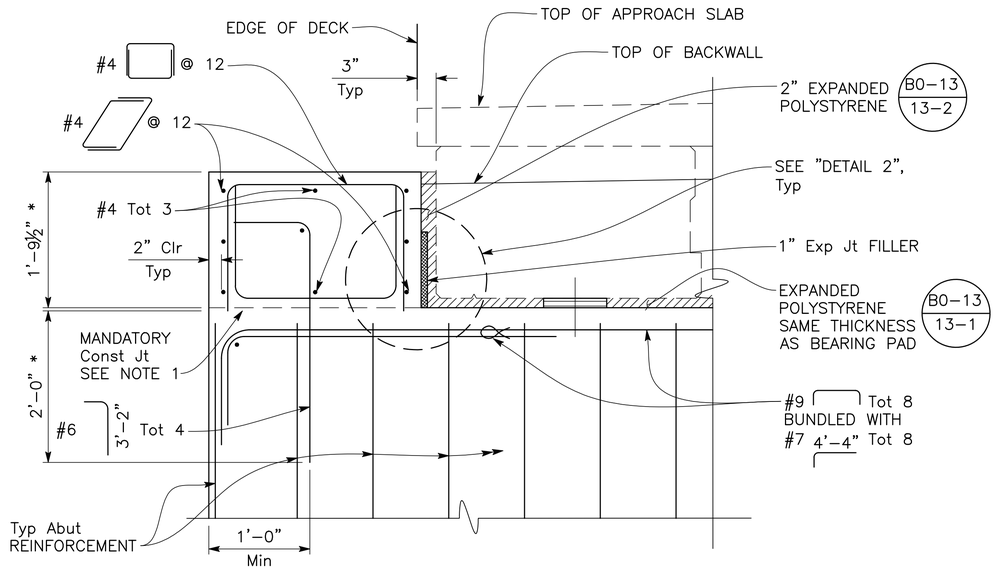

EXTERIOR SHEAR KEY ELEVATION

1" = 1'-0"

ABUTMENT 1 EXTERIOR SHEAR KEY SHOWN, ABUTMENT 2 EXTERIOR SHEAR KEY SIMILAR

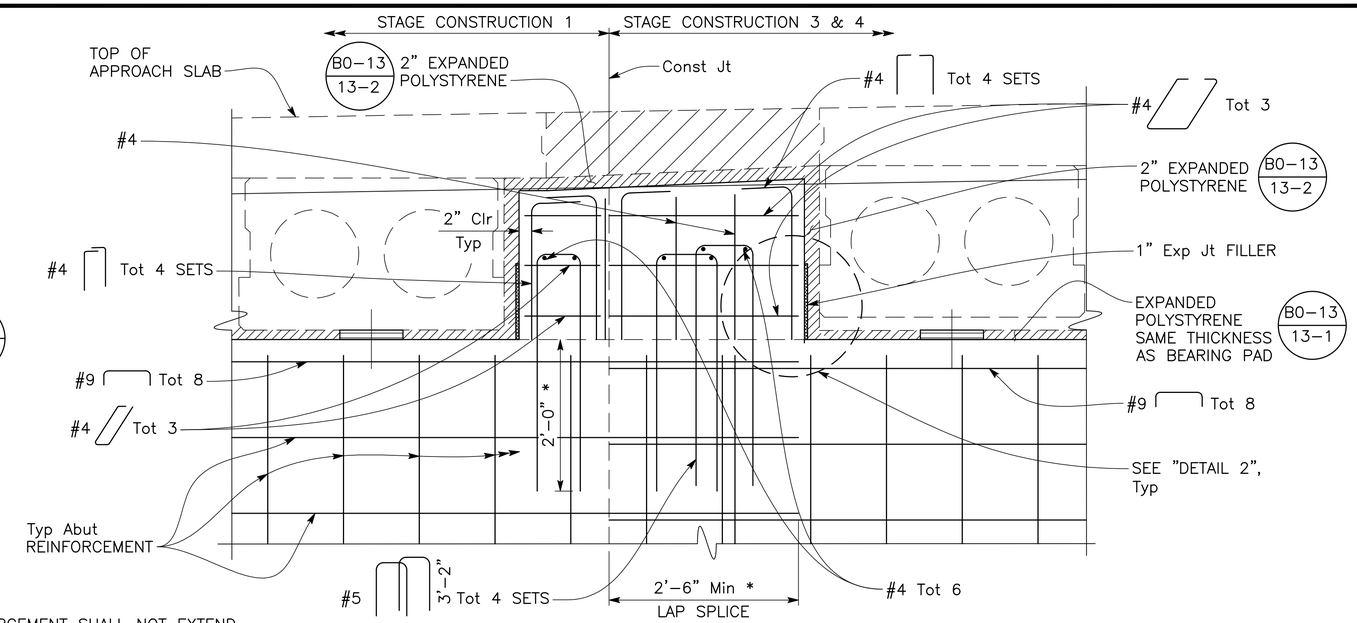

INTERIOR SHEAR KEY ELEVATION

1" = 1'-0"

ABUTMENT 1 INTERIOR SHEAR KEY SHOWN, ABUTMENT 2 INTERIOR SHEAR KEY SIMILAR

NOTE: REINFORCEMENT SHALL NOT EXTEND THROUGH SHEAR KEY CONSTRUCTION JOINT EXCEPT AS SHOWN

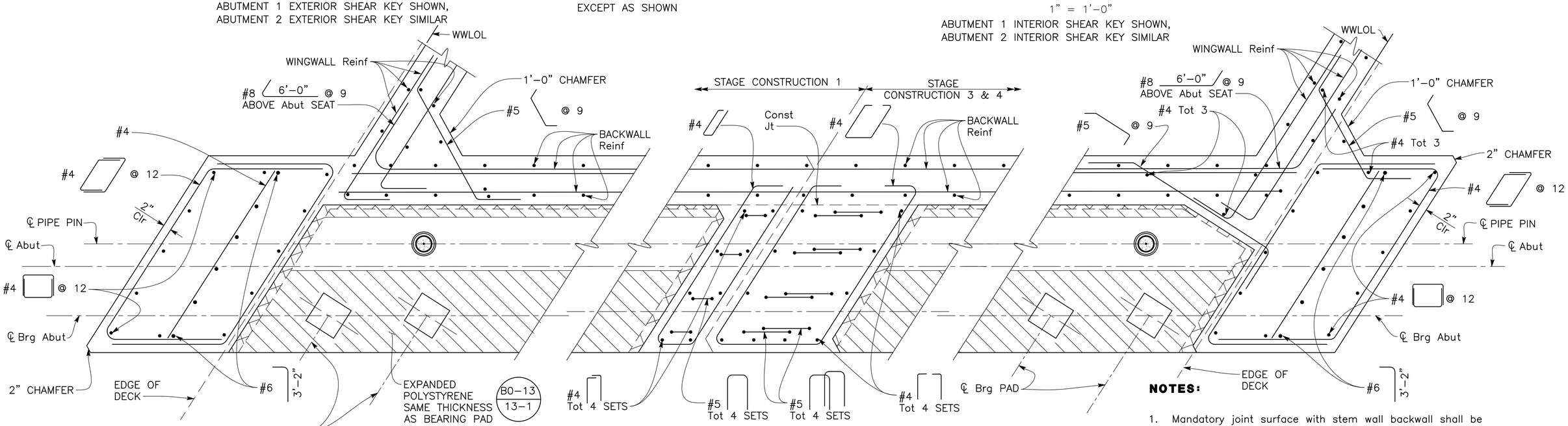

SECTION B-B

1" = 1'-0"

ABUTMENT 1 SHOWN, ABUTMENT 2 SIMILAR

NOTES:

1. Mandatory joint surface with stem wall backwall shall be trowel-finished smooth and lined with 15 lb Construction Paper.
2. For Bearing Details and Detail 2, see "ABUTMENT DETAILS NO. 4" sheet.
3. For Pipe Key Details, see "ABUTMENT DETAILS NO. 6" sheet.

	DATE	RECORD DRAWING	
DESIGNED: F. CASIMIRO	7/6/26	RESIDENT ENGINEER	DATE
DRAWN: E. CISNEROS	7/6/26		
CHECKED: T. DUBOVIK	7/6/26		

FOR RIGHT OF WAY DATA AND ACCURATE ACCESS DETERMINATION, SEE DOCUMENTS IN THE DEPARTMENT OF PUBLIC WORKS AND PLANNING.

SCALE: AS SHOWN

REGISTERED PROFESSIONAL ENGINEER MICHAEL A. PUDDICOMBE No. 071025 Exp. 03/31/26 CIVIL STATE OF CALIFORNIA

Dewberry
DEWBERRY ENGINEERING INC.
11060 WHITE ROCK ROAD SUITE 200
RANCHO CORDOVA, CA 95670

PROJECT: TRAVERS CREEK BRIDGE ON MANNING AVENUE

ROAD NO. S0900 BRIDGE NO. 42C-0687

THE COUNTY OF FRESNO 1856

DEPARTMENT OF PUBLIC WORKS AND PLANNING

ABUTMENT DETAILS NO. 3

DRAWING NO. 11256 SHEET NO. ST-10 TOTAL 62

FILE => U:\13017 – Manning Avenue over Travers Creek Bridge – sub BCA\400 Project Design Files\430 Bridges & Structures\Plans\TC-S-403.dwg

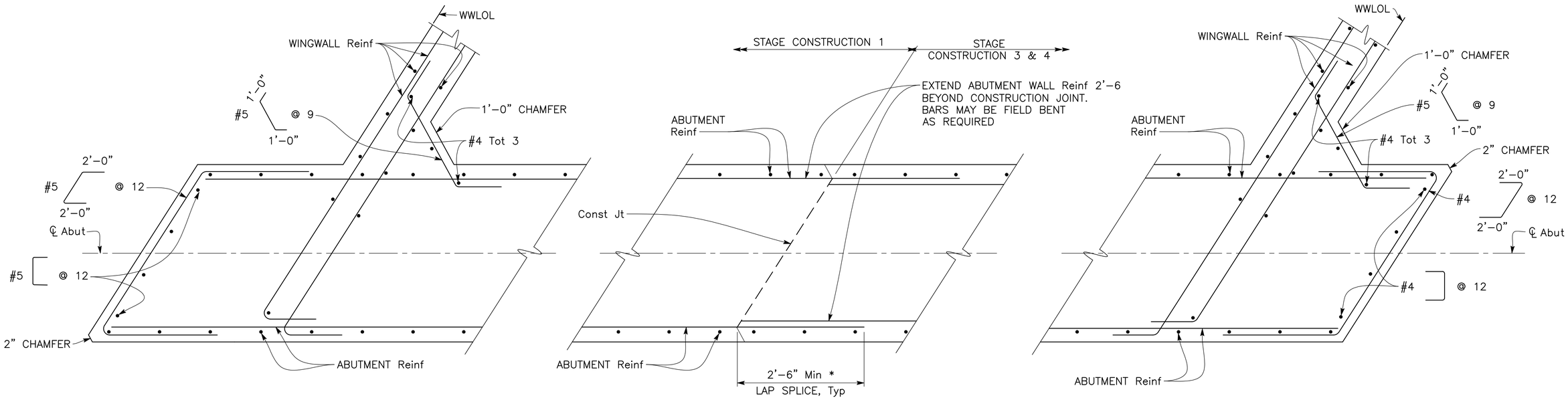

SECTION C-C

1" = 1'-0"

ABUTMENT 1 SHOWN, ABUTMENT 2 SIMILAR

* LAP SPLICE IS THE SAME FOR THE BACWALL LONGITUDINAL REINFORCEMENT

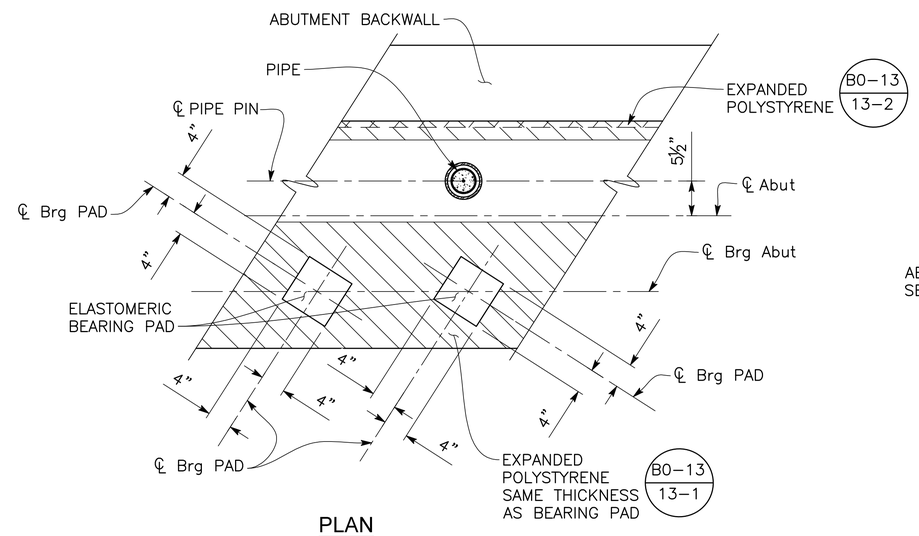

PLAN

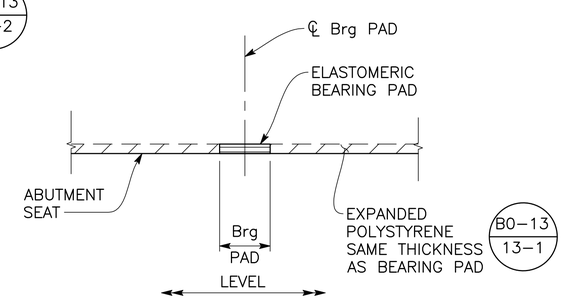

ELEVATION

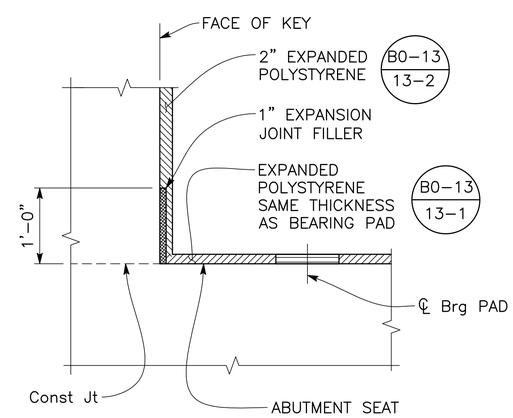

DETAIL 2

1" = 1'-0"

BEARING PAD DETAILS

1" = 1'-0"

	DATE	RECORD DRAWING		SCALE
DESIGNED: F. CASIMIRO	7/6/26	RESIDENT ENGINEER	DATE	AS SHOWN
DRAWN: E. CISNEROS	7/6/26			
CHECKED: T. DUBOVIK	7/6/26			

FOR RIGHT OF WAY DATA AND ACCURATE ACCESS DETERMINATION, SEE DOCUMENTS IN THE DEPARTMENT OF PUBLIC WORKS AND PLANNING.

REGISTERED PROFESSIONAL ENGINEER MICHAEL A. PUDDICOMBE No. C 70710 Exp. 03/31/26 CIVIL STATE OF CALIFORNIA

Dewberry
DEWBERRY ENGINEERING INC.
11060 WHITE ROCK ROAD SUITE 200
RANCHO CORDOVA, CA 95670

PROJECT
TRAVERS CREEK BRIDGE ON MANNING AVENUE
ROAD NO. S0900 BRIDGE NO. 42C-0687

THE COUNTY OF FRESNO 1856

DEPARTMENT OF PUBLIC WORKS AND PLANNING
ABUTMENT DETAILS NO. 4
DRAWING NO. 11256 SHEET NO. ST-11 TOTAL 62

FILE => U:\13017 – Manning Avenue over Travers Creek Bridge – sub BCA\400 Project Design Files\430 Bridges & Structures\Plans\TC-S-404.dwg

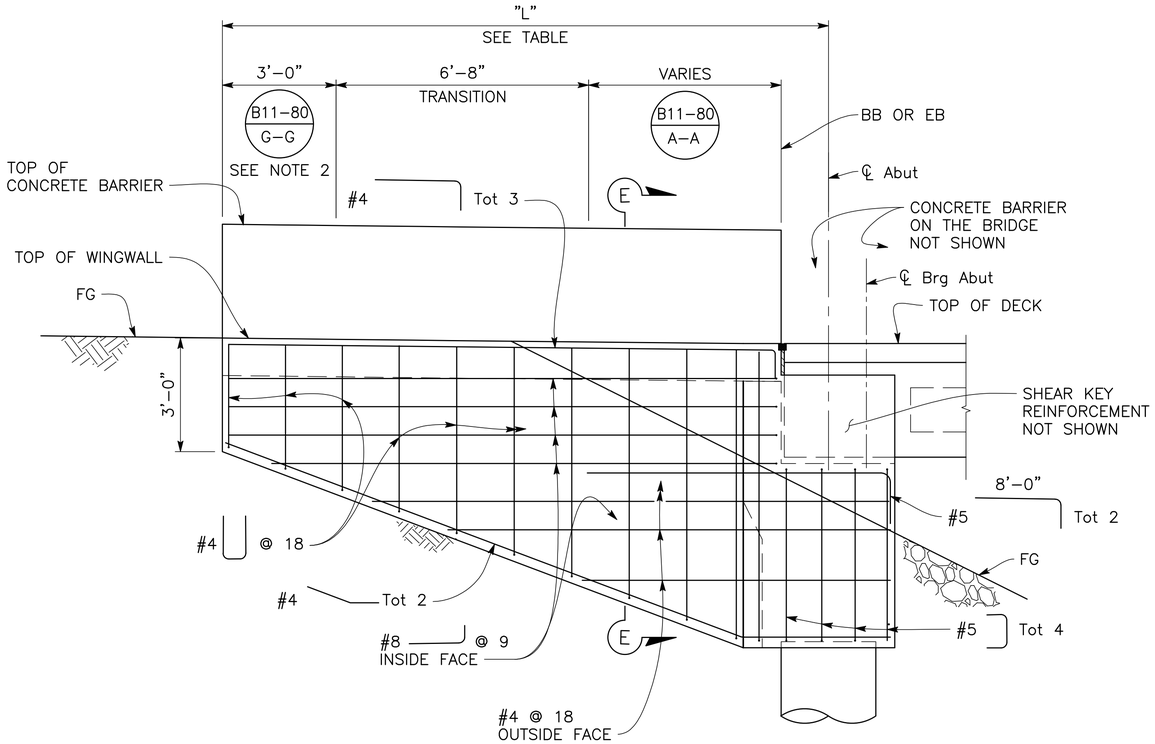

TYPICAL WINGWALL ELEVATION

½" = 1'-0"

ABUTMENT 1 RIGHT WINGWALL SHOWN, OTHERS WINGWALL SIMILAR

TABLE "L"	
WINGWALL 1	12-6"
WINGWALL 2	10'-0"
WINGWALL 3	12'-6"
WINGWALL 4	16'-0"

NOTES:

1. Wingwalls shall be poured directly on structural backfill.
2. For locations with MGS, see "GENERAL PLAN" sheet.

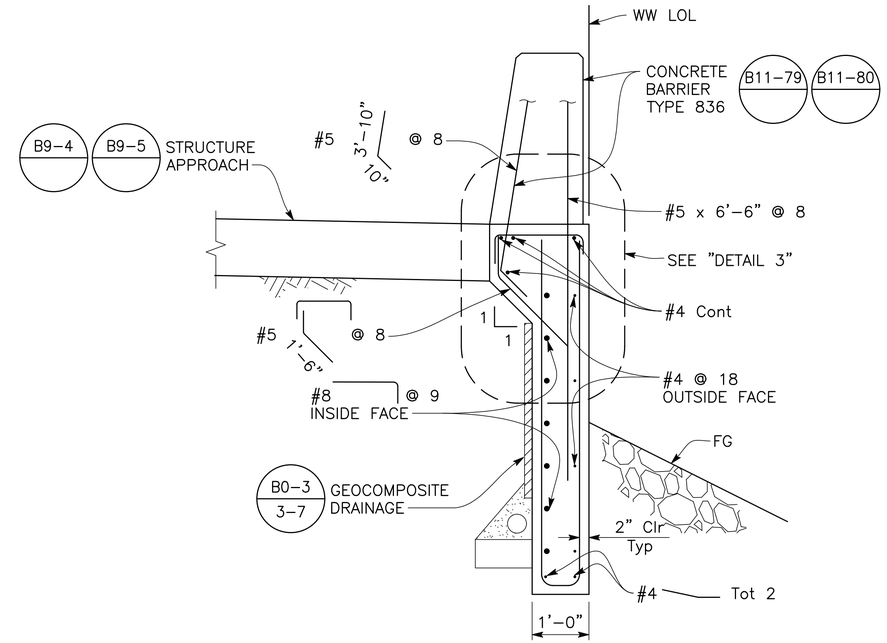

SECTION E-E

¾" = 1'-0"

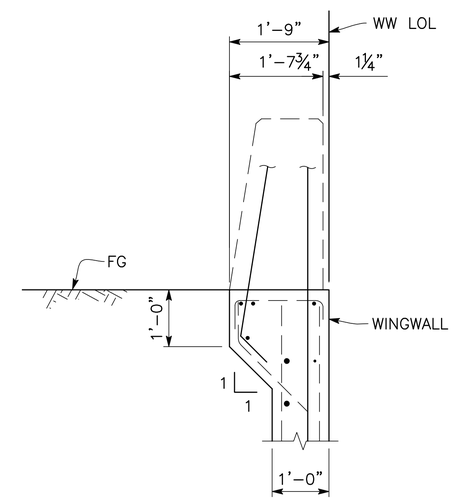

DETAIL 3

¾" = 1'-0"

	DATE	RECORD DRAWING		SCALE		PROJECT		DEPARTMENT OF PUBLIC WORKS AND PLANNING
DESIGNED: F. CASIMIRO	7/6/26	RESIDENT ENGINEER	DATE	AS SHOWN	Dewberry DEWBERRY ENGINEERING INC. 11060 WHITE ROCK ROAD SUITE 200 RANCHO CORDOVA, CA 95670	TRAVERS CREEK BRIDGE ON MANNING AVENUE	THE COUNTY OF FRESNO 1856	ABUTMENT DETAILS NO. 5
DRAWN: E. CISNEROS	7/6/26							
CHECKED: T. DUBOVIK	7/6/26					ROAD NO. S0900 BRIDGE NO. 42C-0687		DRAWING NO. 11256 SHEET NO. ST-12 TOTAL 62

FOR RIGHT OF WAY DATA AND ACCURATE ACCESS DETERMINATION, SEE DOCUMENTS IN THE DEPARTMENT OF PUBLIC WORKS AND PLANNING.

REGISTERED PROFESSIONAL ENGINEER MICHAEL J. RUDY No. C 43718 Exp. 03/31/28 CIVIL STATE OF CALIFORNIA

FILE => U:\13017 – Manning Avenue over Travers Creek Bridge – sub BC4\100 Project Design Files\430 Bridges & Structures\Plans\TC-S-405.dwg

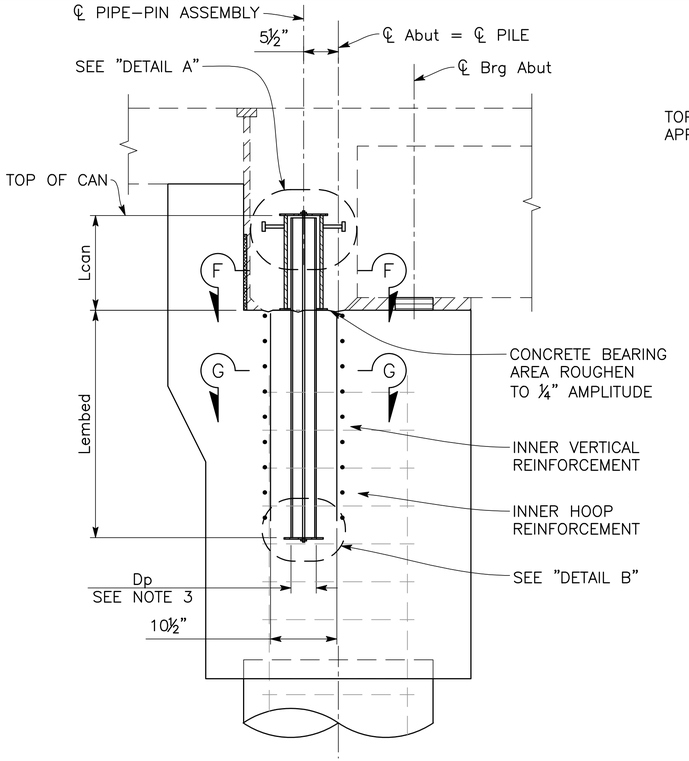

PIPE-PIN ASSEMBLY DETAIL

½" = 1'–0"

NOTE: Abutment Cap Reinforcement not shown for clarity

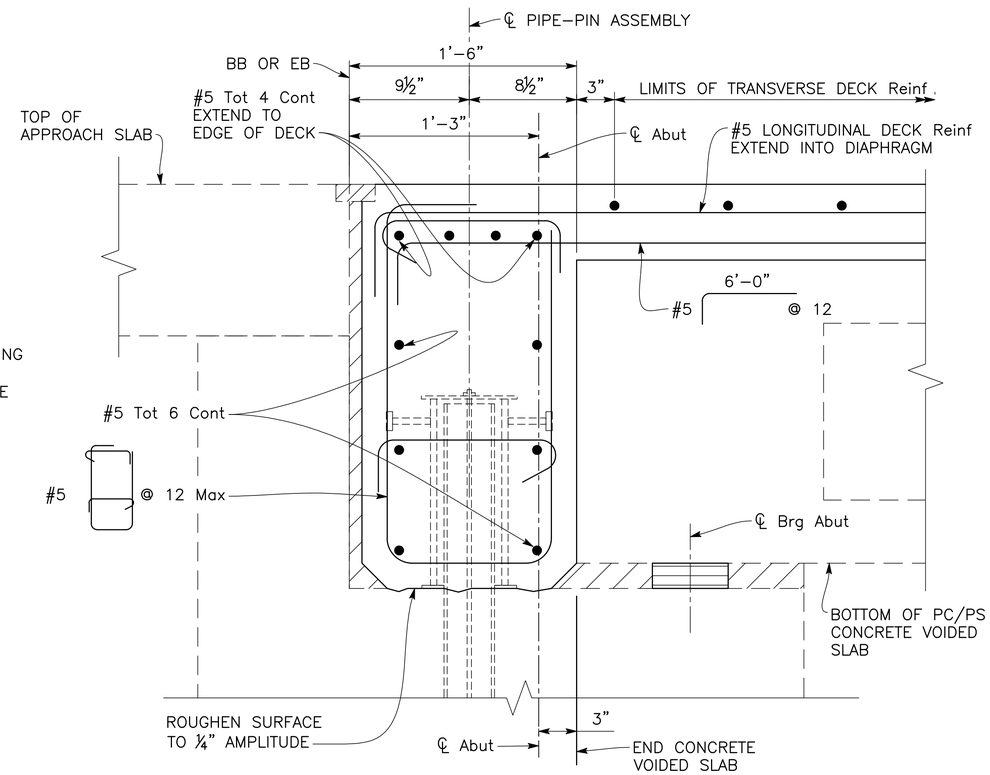

END DIAPHRAGM DETAIL

2" = 1'–0"

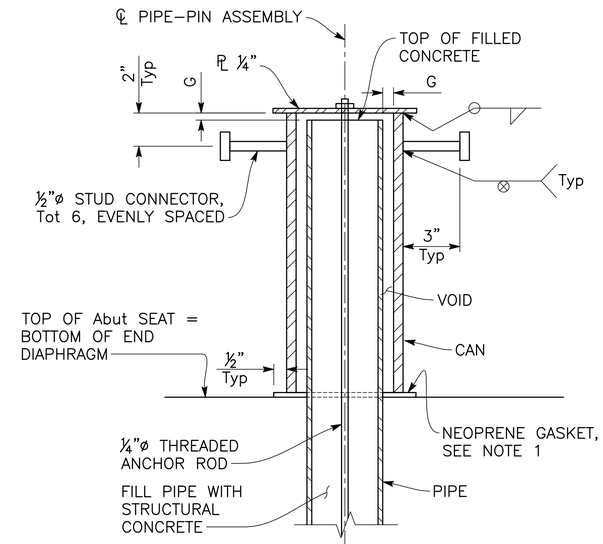

DETAIL A

3" = 1'–0"

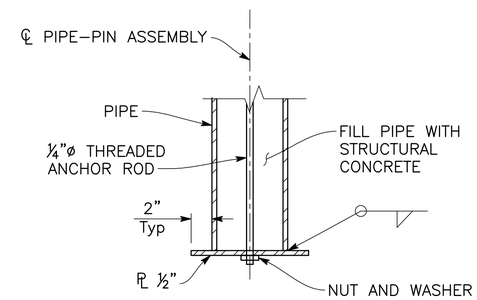

DETAIL B

3" = 1'–0"

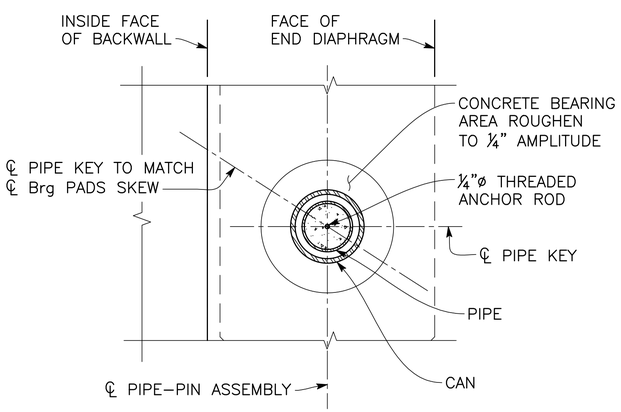

SECTION F-F

2" = 1'–0"

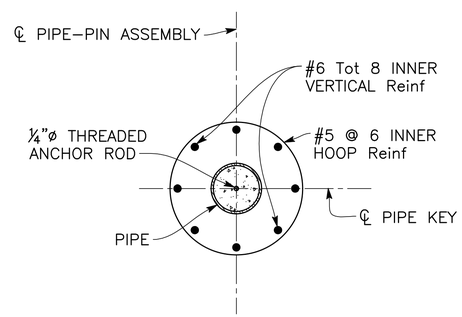

SECTION G-G

2" = 1'–0"

PIPE KEY DESIGN TABLE	
Lembed	3–0"
Lcan	1'–3"
CAN SIZE	(ROUND) HSS 5.5630x0.500
PIPE SIZE (Dp) = 3½"	STEEL PIPE 3"xx–STRONG
MNIMUM OUTER HOOP Reinf	#6 @ 6

NOTES:

1. The can shall seat tightly against the ¼" thick neoprene gasket placed on concrete around the pipe.
2. All hoops shall be fabricated with ultimate butt splices.
3. Dp is outside diameter of pipe.

PIPE PIN PLACEMENT PROCEDURE

1. Prior to placing Abutment Seat concrete place lower 3"xx strong pipe in at ℄ pipe pin, insert ¼" Anchor Rod into center of pipe using centralizers, set rod to proper height.
2. Place upper 5.563X0.50 HSS Pipe over embedded pipe sealing at bottom with rubber gasket. Position pipe into place with proper clearances. Place ¼" thick circular plate on top of HSS pipe with ¼" rod through hole in plate. tack weld into place and secure upper assembly into place with hex nut.

	DATE	RECORD DRAWING	
DESIGNED: F. CASIMIRO	7/6/26	RESIDENT ENGINEER	DATE
DRAWN: E. CISNEROS	7/6/26		
CHECKED: T. DUBOVIK	7/6/26		

FOR RIGHT OF WAY DATA AND ACCURATE ACCESS DETERMINATION, SEE DOCUMENTS IN THE DEPARTMENT OF PUBLIC WORKS AND PLANNING.

SCALE: AS SHOWN

REGISTERED PROFESSIONAL ENGINEER MICHAEL L. PUGH C 037107 Exp. 03/31/27 CIVIL STATE OF CALIFORNIA

Dewberry
DEWBERRY ENGINEERING INC.
11060 WHITE ROCK ROAD SUITE 200
RANCHO CORDOVA, CA 95670

PROJECT: TRAVERS CREEK BRIDGE ON MANNING AVENUE

ROAD NO. S0900 BRIDGE NO. 42C-0687

THE COUNTY OF FRESNO 1856

DEPARTMENT OF PUBLIC WORKS AND PLANNING

ABUTMENT DETAILS NO. 6

DRAWING NO. 11256 SHEET NO. ST-13 TOTAL 62

FILE => U:\13017 – Manning Avenue over Travers Creek Bridge – sub B04\400 Project Design Files\430 Bridges & Structures\Plans\TC-S-A06.dwg

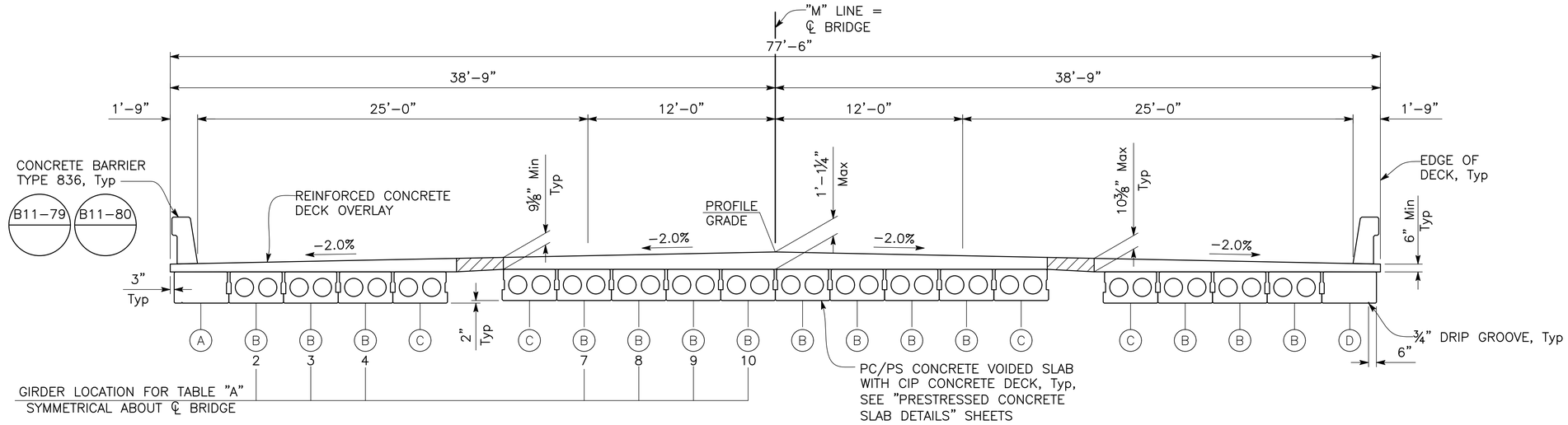

TYPICAL SECTION

¼" = 1'-0"

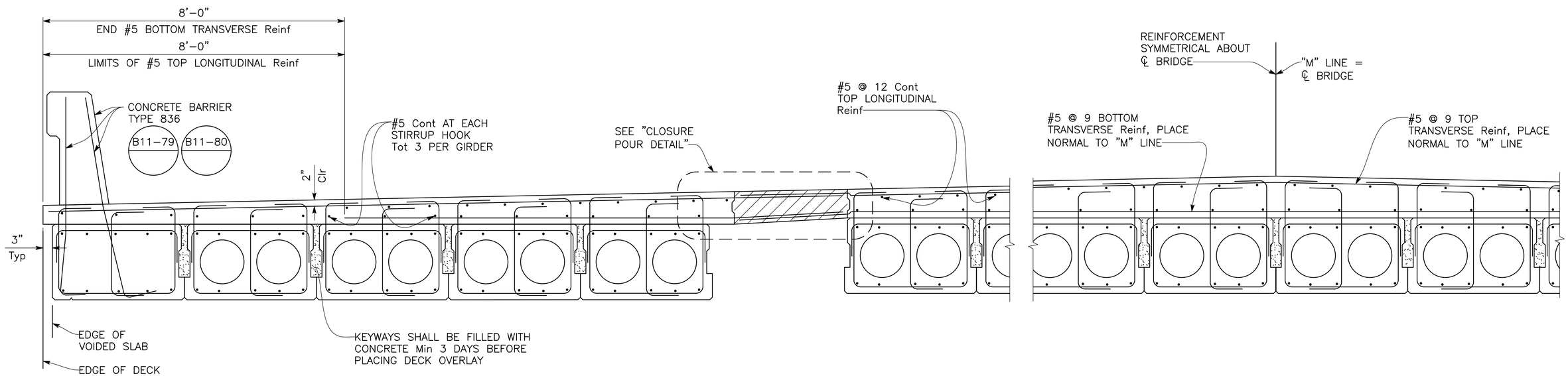

PART TYPICAL SECTION

¾" = 1'-0"

NOTES:

1. For Closure Pour Detail, see "PRECAST SLAB DETAILS NO. 1" sheet.
2. For Table "A", see "PRECAST SLAB DETAILS NO. 4" sheet.

LEGEND:

Indicates Closure Pour

(X) Denotes PC/PS Concrete Voided Slab Type

	DATE	RECORD DRAWING		SCALE		PROJECT		DEPARTMENT OF PUBLIC WORKS AND PLANNING
DESIGNED: F. CASIMIRO	7/6/26	RESIDENT ENGINEER	DATE	AS SHOWN	Dewberry DEWBERRY ENGINEERING INC. 11060 WHITE ROCK ROAD SUITE 200 RANCHO CORDOVA, CA 95670	TRAVERS CREEK BRIDGE ON MANNING AVENUE	THE COUNTY OF FRESNO 1856	TYPICAL SECTION
DRAWN: E. CISNEROS	7/6/26					ROAD NO. S0900 BRIDGE NO. 42C-0687		DRAWING NO. 11256 SHEET NO. ST-14 TOTAL 62
CHECKED: T. DUBOVIK	7/6/26							

FOR RIGHT OF WAY DATA AND ACCURATE ACCESS DETERMINATION, SEE DOCUMENTS IN THE DEPARTMENT OF PUBLIC WORKS AND PLANNING.

REGISTERED PROFESSIONAL ENGINEER MICHAEL A. PUGH C 47110 Exp. 03/31/26 CIVIL STATE OF CALIFORNIA

FILE => U:\13017 – Manning Avenue over Travers Creek Bridge – sub BCA\100 Project Design Files\430 Bridges & Structures\Plans\TC-3-TS.dwg

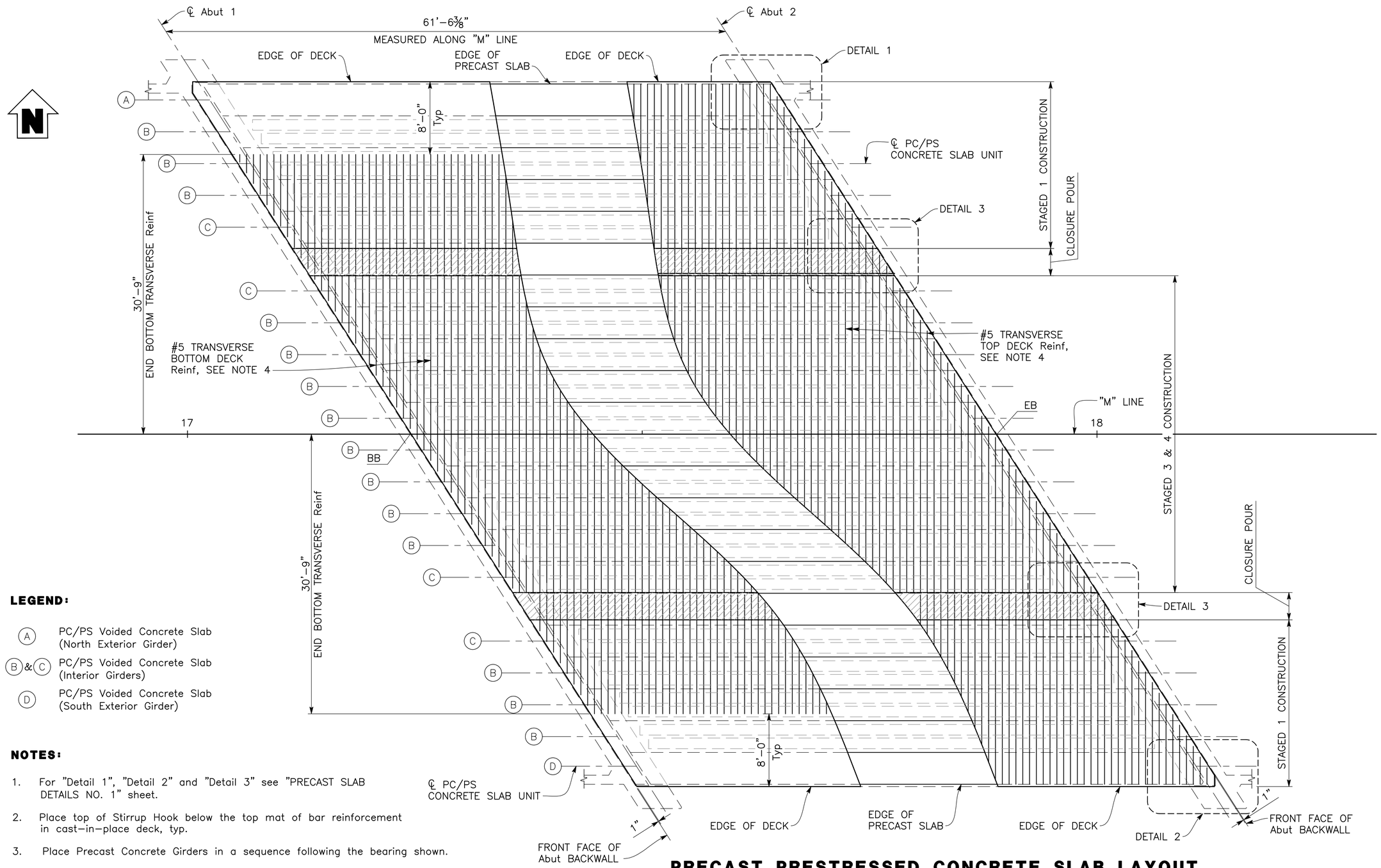

PRECAST PRESTRESSED CONCRETE SLAB LAYOUT

3/16" = 1'-0"

LEGEND:

- (A) PC/PS Voided Concrete Slab (North Exterior Girder)
- (B) & (C) PC/PS Voided Concrete Slab (Interior Girders)
- (D) PC/PS Voided Concrete Slab (South Exterior Girder)

NOTES:

1. For "Detail 1", "Detail 2" and "Detail 3" see "PRECAST SLAB DETAILS NO. 1" sheet.
2. Place top of Stirrup Hook below the top mat of bar reinforcement in cast-in-place deck, typ.
3. Place Precast Concrete Girders in a sequence following the bearing shown.
4. For limits of transverse deck reinforcement, see "TYPICAL SECTION" sheet.

	DATE	RECORD DRAWING		SCALE
DESIGNED: F. CASIMIRO	7/6/26	RESIDENT ENGINEER	DATE	AS SHOWN
DRAWN: E. CISNEROS	7/6/26			
CHECKED: T. DUBOVIK	7/6/26			

FOR RIGHT OF WAY DATA AND ACCURATE ACCESS DETERMINATION, SEE DOCUMENTS IN THE DEPARTMENT OF PUBLIC WORKS AND PLANNING.

REGISTERED PROFESSIONAL ENGINEER MICHAEL A. PUDDICOMBE No. C 40710 Exp. 03/31/28 CIVIL STATE OF CALIFORNIA

Dewberry
DEWBERRY ENGINEERING INC.
11060 WHITE ROCK ROAD SUITE 200
RANCHO CORDOVA, CA 95670

PROJECT
TRAVERS CREEK BRIDGE ON MANNING AVENUE
ROAD NO. S0900 BRIDGE NO. 42C-0687

THE COUNTY OF FRESNO 1856

DEPARTMENT OF PUBLIC WORKS AND PLANNING
PRECAST SLAB LAYOUT
DRAWING NO. 11256 SHEET NO. ST-15 TOTAL 62

FILE => U:\13017 - Manning Avenue over Travers Creek Bridge - sub BCA\400 Project Design Files\430 Bridges & Structures\Plans\TC-S-01.dwg

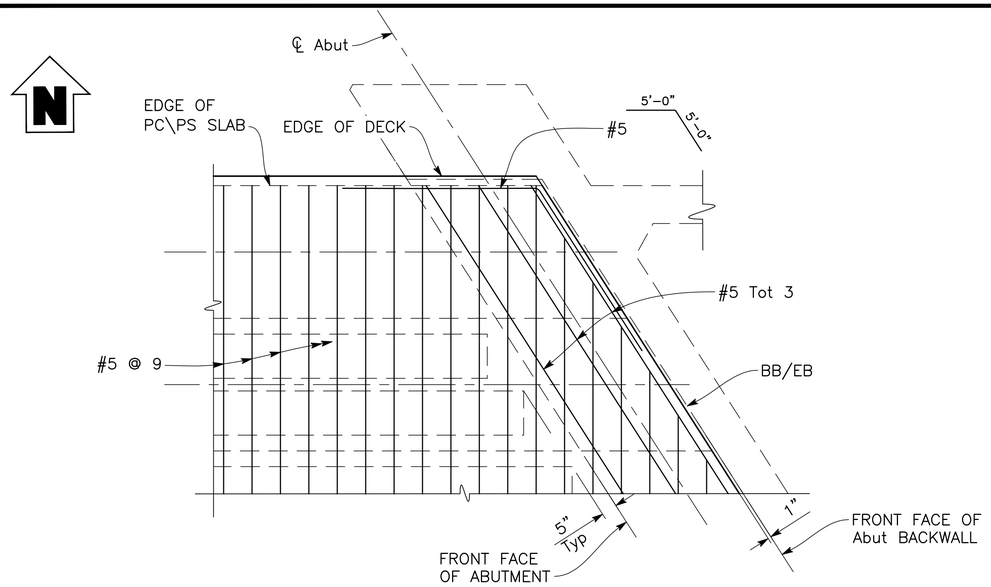

DETAIL 1

½" = 1'-0"

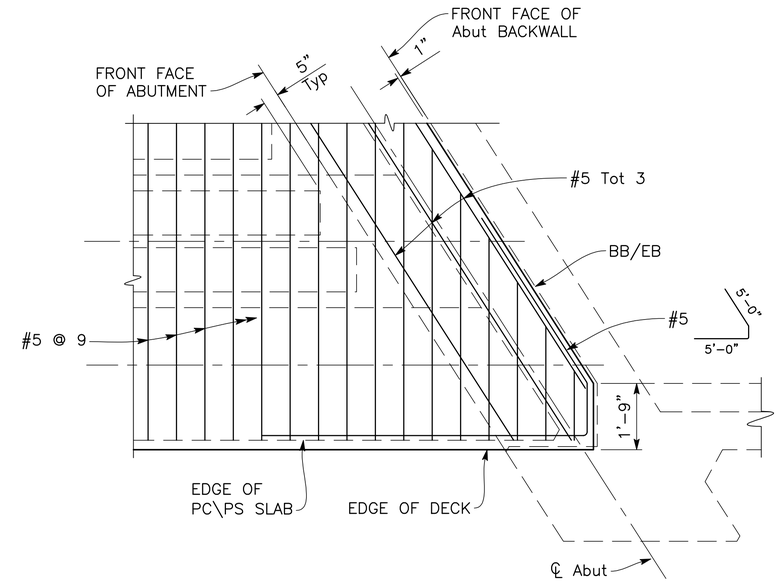

DETAIL 2

½" = 1'-0"

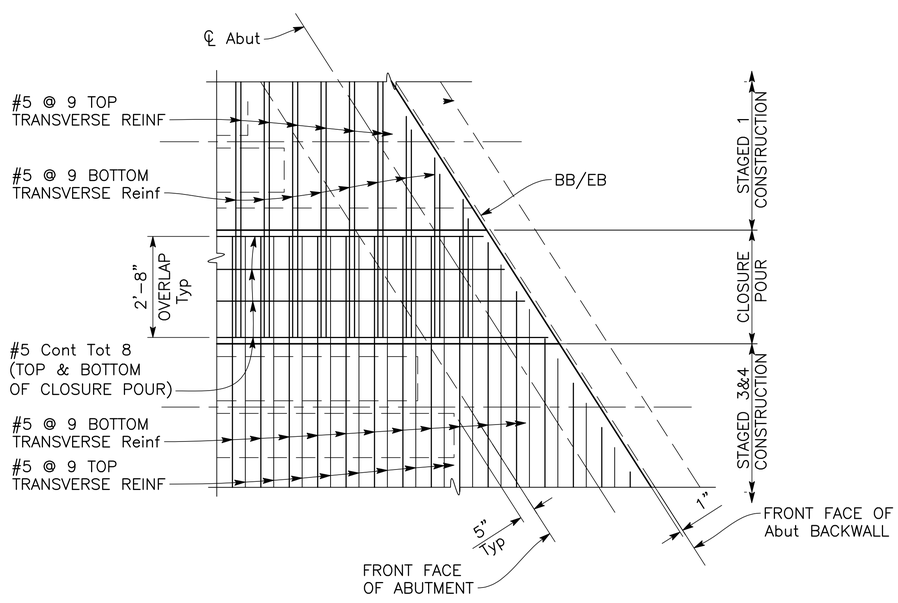

DETAIL 3

½" = 1'-0"

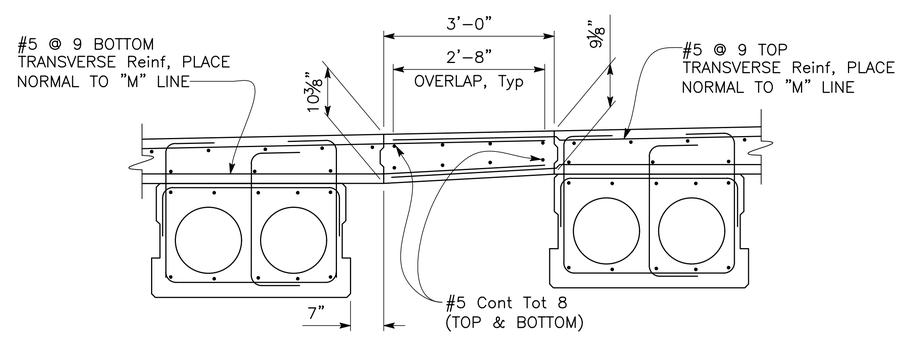

CLOSURE POUR DETAIL

¾" = 1'-0"

	DATE	RECORD DRAWING	
DESIGNED: F. CASIMIRO	7/6/26	RESIDENT ENGINEER	DATE
DRAWN: E. CISNEROS	7/6/26		
CHECKED: T. DUBOVIK	7/6/26		

FOR RIGHT OF WAY DATA AND ACCURATE ACCESS DETERMINATION, SEE DOCUMENTS IN THE DEPARTMENT OF PUBLIC WORKS AND PLANNING.

SCALE: AS SHOWN

REGISTERED PROFESSIONAL ENGINEER — MICHAEL A. PUCCI — No. C 43710 — Exp. 03/31/26 — CIVIL — STATE OF CALIFORNIA

Dewberry
DEWBERRY ENGINEERING INC.
11060 WHITE ROCK ROAD SUITE 200
RANCHO CORDOVA, CA 95670

PROJECT: TRAVERS CREEK BRIDGE ON MANNING AVENUE
ROAD NO. S0900 BRIDGE NO. 42C-0687

THE COUNTY OF FRESNO 1856

DEPARTMENT OF PUBLIC WORKS AND PLANNING

PRECAST SLAB DETAILS NO. 1

DRAWING NO. 11256 SHEET NO. ST-16 TOTAL 62

FILE => U:\13017 – Manning Avenue over Travers Creek Bridge – sub BCA\400 Project Design Files\430 Bridges & Structures\Plans\TC-S-GL.dwg

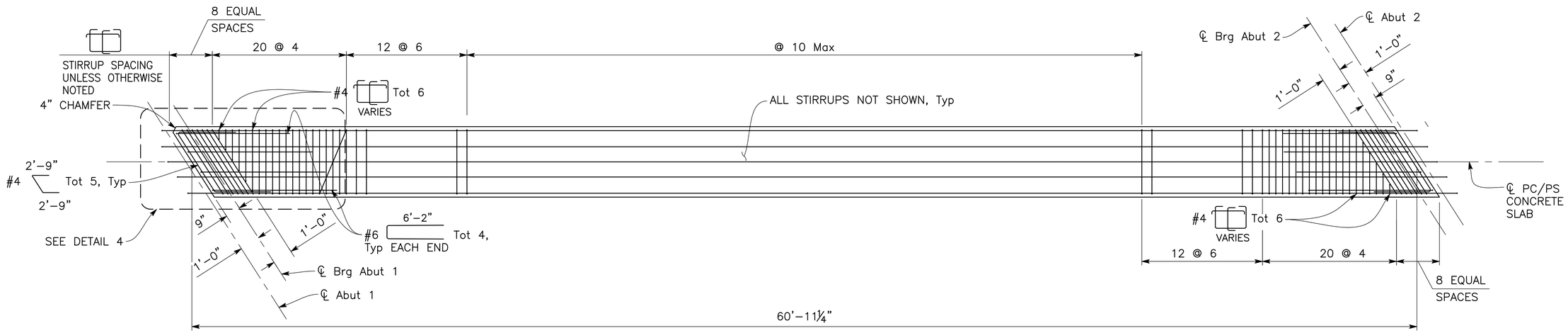

PLAN

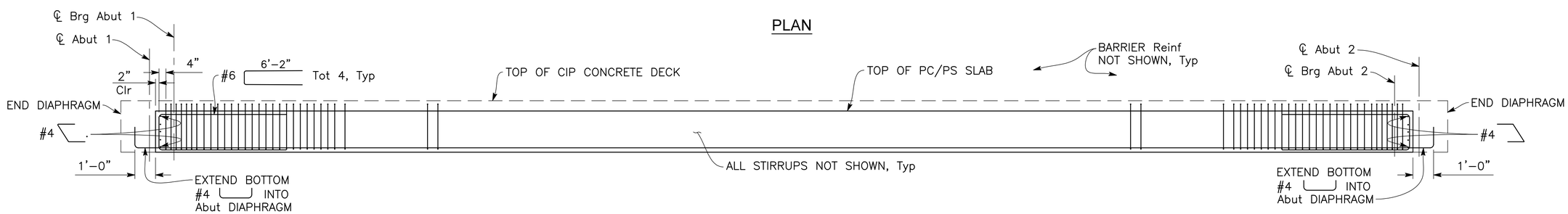

ELEVATION

PRECAST PRESTRESSED CONCRETE SLAB

⅜" = 1'-0"

GIRDER (A) SHOWN, GIRDER (D) SIMILAR

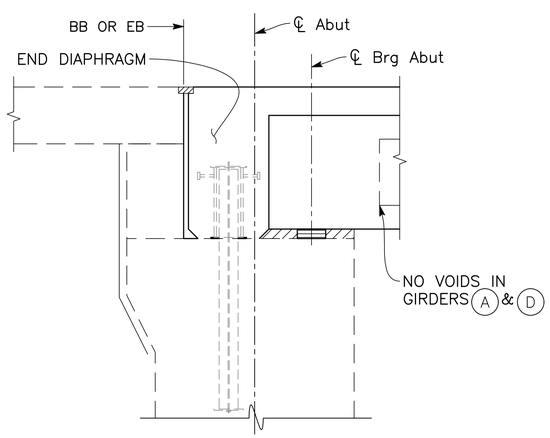

SUPPORT DETAIL

¾" = 1'-0"

NOTES:

1. Coarse broom finish shall be applied to top of all Precast Concrete Slab Units.
2. For details not shown, see "PRECAST SLAB DETAILS NO. 4" sheet.
3. For Prestressing strand layout and debonding locations, see "PRECAST SLAB DETAILS NO. 4" sheet.
4. For Detail 4, see "PRECAST SLAB DETAILS NO. 3" sheet.

	DATE	RECORD DRAWING	
DESIGNED: F. CASIMIRO	7/6/26	RESIDENT ENGINEER	DATE
DRAWN: E. CISNEROS	7/6/26		
CHECKED: T. DUBOVIK	7/6/26		

FOR RIGHT OF WAY DATA AND ACCURATE ACCESS DETERMINATION, SEE DOCUMENTS IN THE DEPARTMENT OF PUBLIC WORKS AND PLANNING.

SCALE: AS SHOWN

REGISTERED PROFESSIONAL ENGINEER MICHAEL A. PUCCINELLI No. 47710 Exp. 03/31/26 CIVIL STATE OF CALIFORNIA

Dewberry
DEWBERRY ENGINEERING INC.
11060 WHITE ROCK ROAD SUITE 200
RANCHO CORDOVA, CA 95670

PROJECT: TRAVERS CREEK BRIDGE ON MANNING AVENUE

ROAD NO. S0900 BRIDGE NO. 42C-0687

THE COUNTY OF FRESNO 1856

DEPARTMENT OF PUBLIC WORKS AND PLANNING

PRECAST SLAB DETAILS NO. 2

DRAWING NO. 11256 SHEET NO. ST-17 TOTAL 62

FILE => U:\13017 – Manning Avenue over Travers Creek Bridge – sub BCA\400 Project Design Files\430 Bridges & Structures\Plans\TC-S-S02.dwg

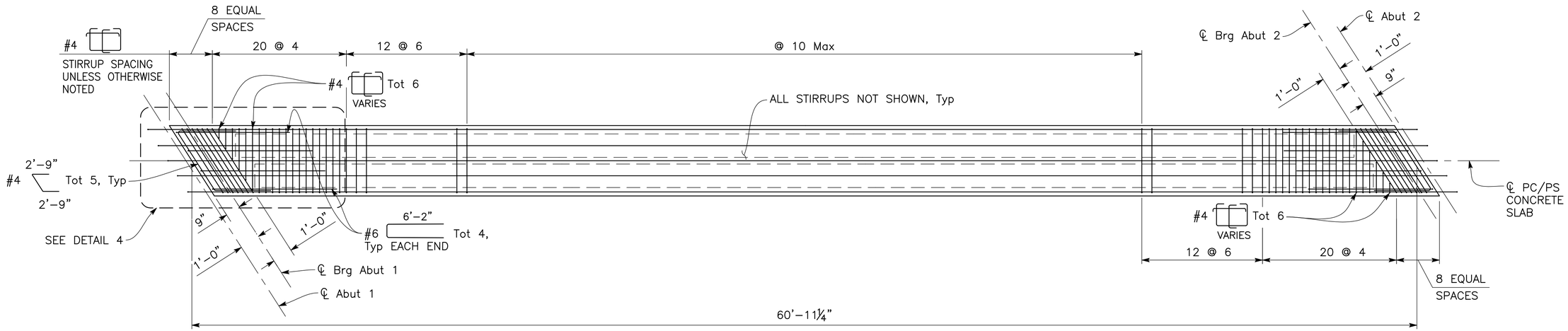

PLAN

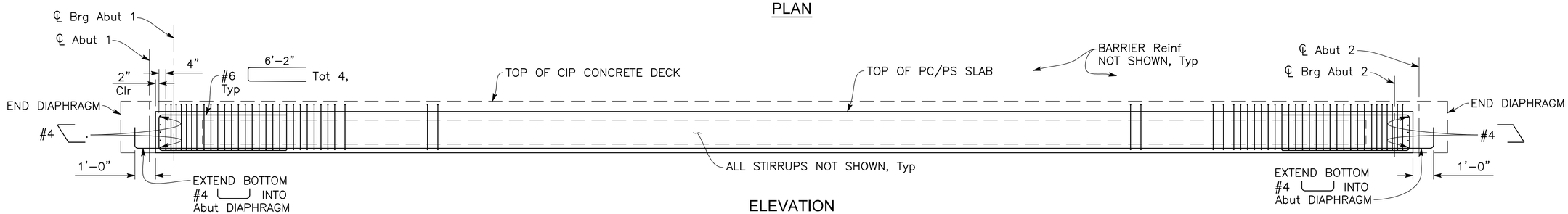

ELEVATION

PRECAST PRESTRESSED CONCRETE SLAB

⅜" = 1'-0"

GIRDER (B) SHOWN, GIRDER (C) SIMILAR

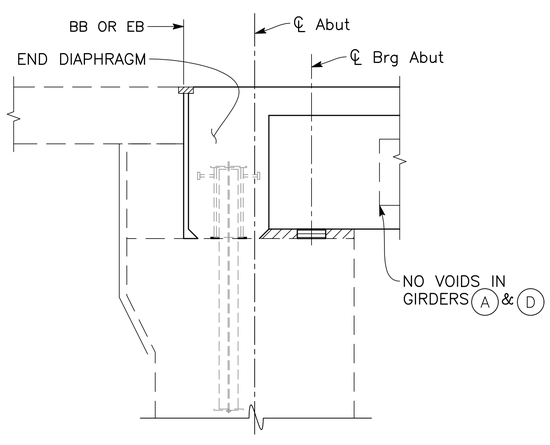

SUPPORT DETAIL

¾" = 1'-0"

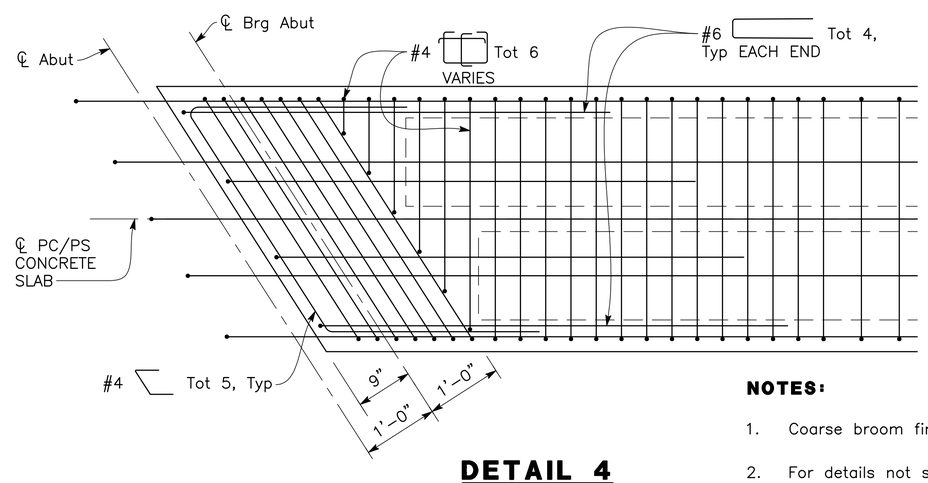

DETAIL 4

1" = 1'-0"

NOTES:

1. Coarse broom finish shall be applied to top of all Precast Concrete Slab Units.
2. For details not shown, see "PRECAST SLAB DETAILS NO. 4" sheet.
3. For Prestressing strand layout and debonding locations, see "PRECAST SLAB DETAILS NO. 4" sheet.

	DATE	RECORD DRAWING		SCALE
DESIGNED: F. CASIMIRO	7/6/26	RESIDENT ENGINEER	DATE	AS SHOWN
DRAWN: E. CISNEROS	7/6/26			
CHECKED: T. DUBOVIK	7/6/26			

FOR RIGHT OF WAY DATA AND ACCURATE ACCESS DETERMINATION, SEE DOCUMENTS IN THE DEPARTMENT OF PUBLIC WORKS AND PLANNING.

REGISTERED PROFESSIONAL ENGINEER MICHAEL A. PUDNEY No. C 43710 Exp. 03/31/28 CIVIL STATE OF CALIFORNIA

Dewberry
DEWBERRY ENGINEERING INC.
11060 WHITE ROCK ROAD SUITE 200
RANCHO CORDOVA, CA 95670

PROJECT
TRAVERS CREEK BRIDGE ON MANNING AVENUE
ROAD NO. S0900 BRIDGE NO. 42C-0687

THE COUNTY OF FRESNO 1856

DEPARTMENT OF PUBLIC WORKS AND PLANNING
PRECAST SLAB DETAILS NO. 3
DRAWING NO. 11256 SHEET NO. ST-18 TOTAL 62

FILE => U:\13017 – Manning Avenue over Travers Creek Bridge – sub BGA\400 Project Design Files\430 Bridges & Structures\Plans\TC-S-S03.dwg

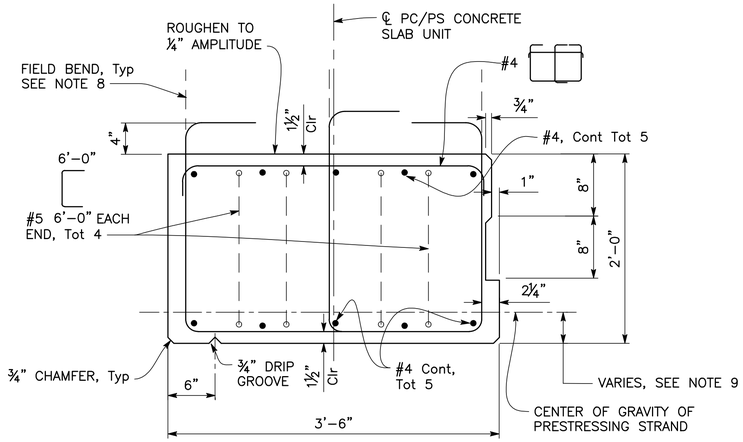

EXTERIOR GIRDERS (A) & (D)

(GIRDER A SHOWN, GIRDER D SIMILAR)

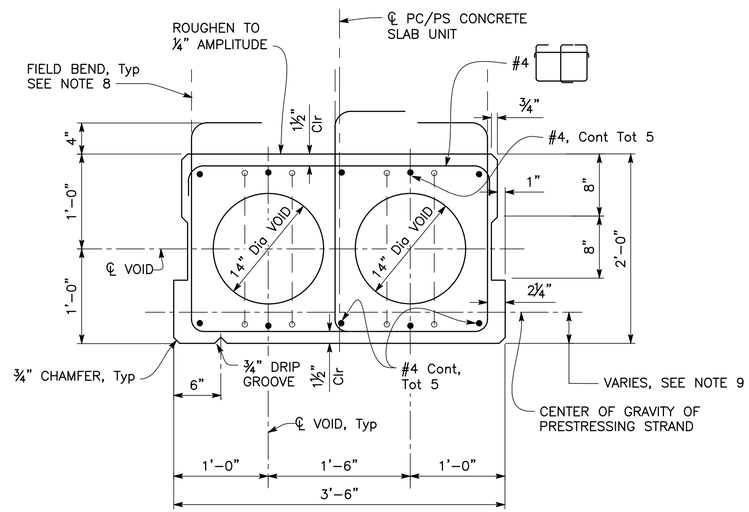

INTERIOR GIRDERS (B) & (C)

TYPICAL PRECAST/PRESTRESSED CONCRETE SLAB UNITS

1½" = 1'–0"

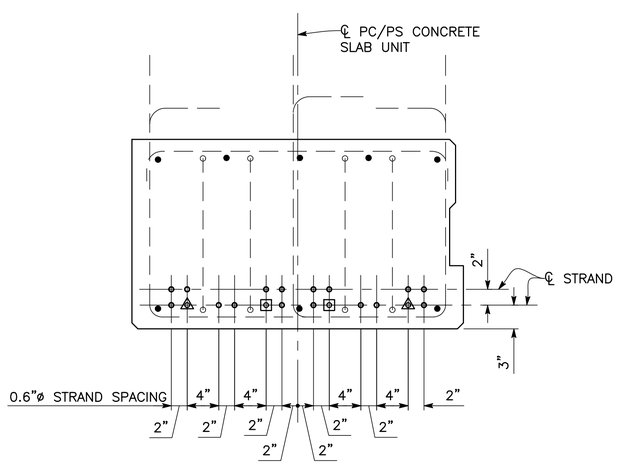

EXTERIOR GIRDERS (A) & (D)

(GIRDER A SHOWN, GIRDER D SIMILAR)

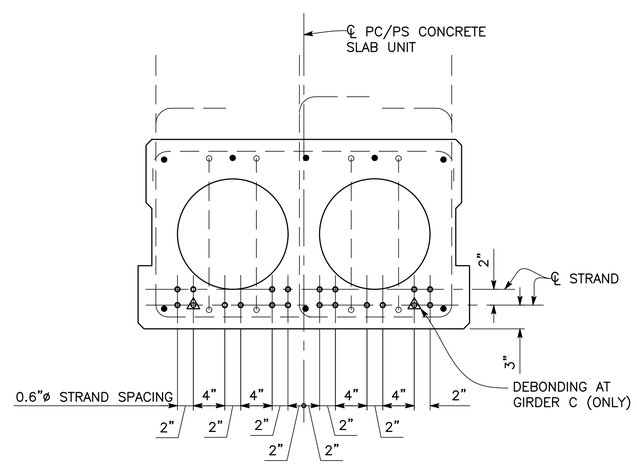

INTERIOR GIRDERS (B) & (C)

STRAND LAYOUT CONCRETE SLAB

1½" = 1'–0"

PRESTRESSING NOTES:

1. The Jacking Force (P) is the jacking force required at the point of control along the span. The jacking force does not include and fabrication specific losses.
2. The maximum tensile stress in the prestressing steel upon release shall not exceed 75% of the specified minimum ultimate tensile strength of the prestressing steel.
3. The maximum temporary tensile stress (jacking stress) in the prestressing steel shall not exceed 80% of the specified minimum ultimate tensile strength of the pre–stressing steel.
4. Concrete strength:
   f'ci is at time of initial stressing
   f'c is at 28 days
   (1 / S8)
5. Deflection components are informational and will be used to set screed line elevations.
6. Screed line elevations for deck concrete will be determined by the Contractor.
7. Pre–stressing strand shall be 270 ksi low relaxation.
8. Field Bend stirrups to provide 2" clearance to finished surface at Bridge Deck.
9. For Prestressing Strand Center of Gravity Distance, see table below.

GIRDER	SLAB UNIT DEPTH (D)	JACKING FORCE (P) (kips)	PRESTRESSING STRAND C.G. * (IN)	CONCRETE STRENGTH (ksi)		MIDSPAN DEAD LOAD DEFLECTION (in)		ADDITIONAL TOP BAR (EACH END)
				f'ci	f'c	DECK	RAIL–**	
(A) & (D)	2'–0"	879	3.80	4	6	0.36	0.17	#5 x 6'–2" TOTAL 4
(B)	2'–0"	703	3.50	4	6	SEE TABLE "A"		#5 x 6'–2" TOTAL 4
(C)	2'–0"	791	3.67	4	6	SEE TABLE "A"		#5 x 6'–2" TOTAL 4

NOTE:
Contractor to verify slab unit length per movement rating of abutment joint seals.

* C.G. is measured from bottom of slab

** Includes both Type 836 Barrier and Temporary barrier (Stage 1 only)

TABLE "A"			
GIRDER TYPE	GIRDER No.	DECK	RAIL–**
STAGE 1			
(C)	N/A	0.57	0.17
(B)	2	0.38	0.17
	3	0.43	0.17
	4	0.47	0.17
STAGE 3 & 4			
(C)	N/A	0.53	N/A
(B)	7	0.54	N/A
	8	0.58	N/A
	9	0.63	N/A
	10	0.67	N/A

LEGEND:

- ○ DENOTES CONTINUOUSLY BONDED STRAND
- △ DENOTES STRAND TO BE DEBONDED 2' EACH END
- ▣ DENOTES STRAND TO BE DEBONDED 4' EACH END

	DATE	RECORD DRAWING	
DESIGNED: F. CASIMIRO	7/6/26	RESIDENT ENGINEER	DATE
DRAWN: E. CISNEROS	7/6/26		
CHECKED: T. DUBOVIK	7/6/26		

FOR RIGHT OF WAY DATA AND ACCURATE ACCESS DETERMINATION, SEE DOCUMENTS IN THE DEPARTMENT OF PUBLIC WORKS AND PLANNING.

SCALE: AS SHOWN

REGISTERED PROFESSIONAL ENGINEER MICHAEL A. PUDNEY No. C037710 Exp. 03/31/28 CIVIL STATE OF CALIFORNIA

Dewberry
DEWBERRY ENGINEERING INC.
11060 WHITE ROCK ROAD SUITE 200
RANCHO CORDOVA, CA 95670

PROJECT: TRAVERS CREEK BRIDGE ON MANNING AVENUE

ROAD NO. S0900 BRIDGE NO. 42C-0687

THE COUNTY OF FRESNO 1856

DEPARTMENT OF PUBLIC WORKS AND PLANNING

PRECAST SLAB DETAILS NO. 4

DRAWING NO. 11256 SHEET NO. ST-19 TOTAL 62

FILE => U:\13017 – Manning Avenue over Travers Creek Bridge – sub BC\400 Project Design Files\430 Bridges & Structures\Plans\TC-S-S04.dwg

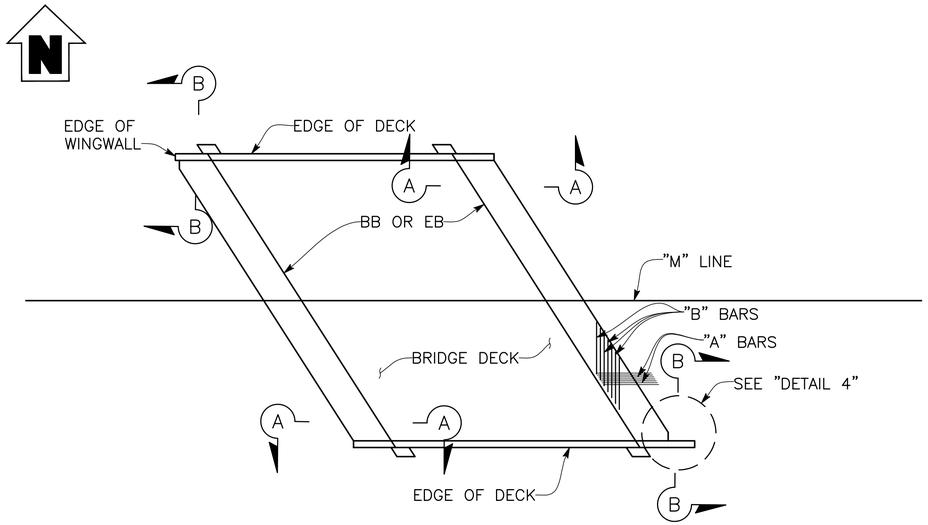

PLAN
1" = 20'

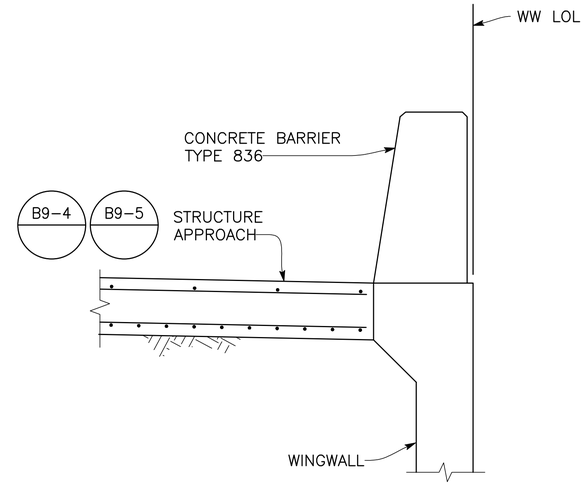

SECTION B-B
¾" = 1'-0"

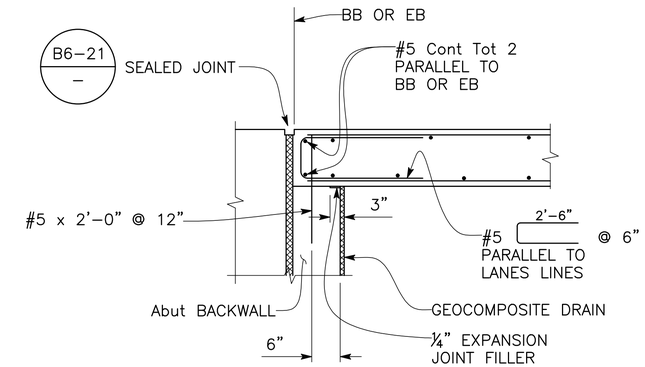

SEAT TYPE ABUTMENT TIE DETAIL
¾" = 1'-0"

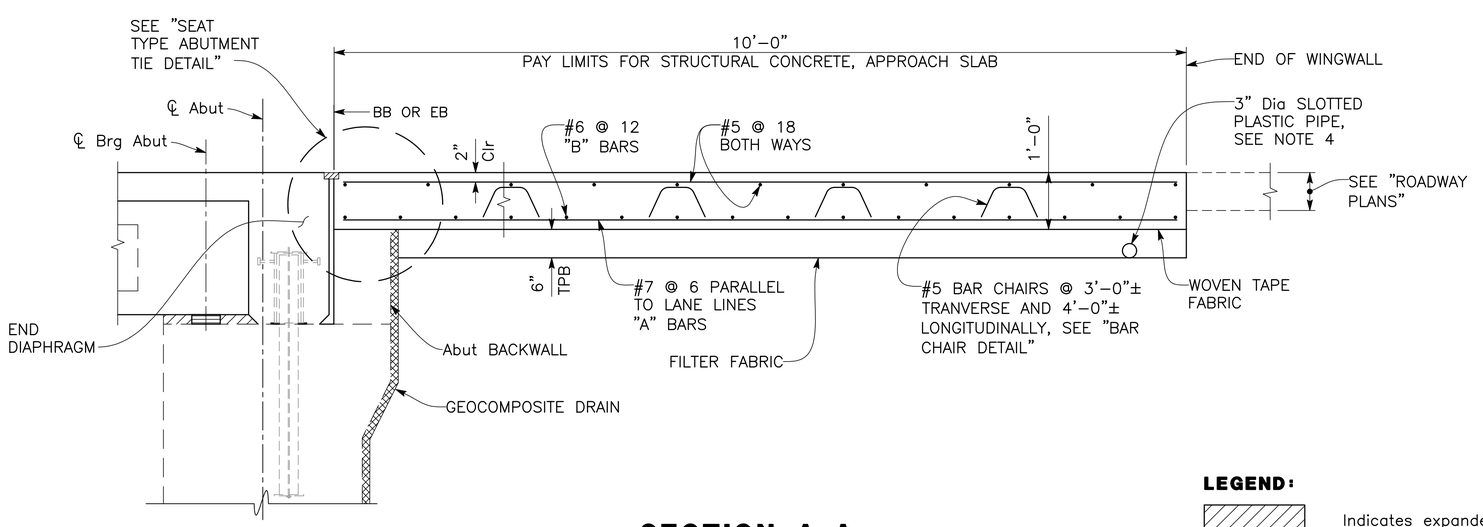

SECTION A-A
¾" = 1'-0"

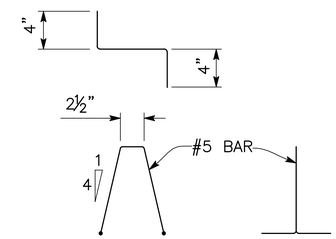

BAR CHAIR DETAIL
1½" = 1'-0"

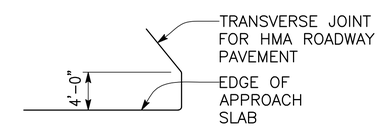

DETAIL 4
NO SCALE

LEGEND:

Indicates expanded polystyrene, remove after concrete has cured

NOTES:

1. Longitudinal construction joints, when permitted by the Engineer, shall be located on lane lines.
2. At the contractor's option, approach slab transverse reinforcement may be placed parallel to BB or EB. Spacing of tranverse reinforcement is measured along ℄ roadway.
3. Provide cross slope to match deck surface grade, see "TYPICAL SECTION" and "DECK CONTOURS" sheets.
4. For structure approach drainage details, refer to: B9-5 / –

	DATE	RECORD DRAWING	
DESIGNED: F. CASIMIRO	7/6/26	RESIDENT ENGINEER	DATE
DRAWN: E. CISNEROS	7/6/26		
CHECKED: T. DUBOVIK	7/6/26		

FOR RIGHT OF WAY DATA AND ACCURATE ACCESS DETERMINATION, SEE DOCUMENTS IN THE DEPARTMENT OF PUBLIC WORKS AND PLANNING.

SCALE: AS SHOWN

REGISTERED PROFESSIONAL ENGINEER MICHAEL A. PUGH No. C 43710 Exp. 03/31/27 CIVIL STATE OF CALIFORNIA

Dewberry
DEWBERRY ENGINEERING INC.
11060 WHITE ROCK ROAD SUITE 200
RANCHO CORDOVA, CA 95670

PROJECT: TRAVERS CREEK BRIDGE ON MANNING AVENUE

ROAD NO. S0900 BRIDGE NO. 42C-0687

THE COUNTY OF FRESNO 1856

DEPARTMENT OF PUBLIC WORKS AND PLANNING

STRUCTURE APPROACH DETAILS

DRAWING NO. 11256 SHEET NO. ST-20 TOTAL 62

FILE => U:\1-3017 – Manning Avenue over Travers Creek Bridge – sub BCA\400 Project Design Files\430 Bridges & Structures\Plans\TC-S-S4.dwg

Notes:
Standard Penetration Test Sampler: I.D. = 1.4"; O.D. = 2"
Modified California Sampler: I.D. = 2.5"; O.D. = 3"
Hammer Assembly: A 140 lb hammer with a 30" drop (Automatic Hammer)

This LOTB sheet was prepared in accordance with the Caltrans Soil & Rock, Logging, Classification, and Presentation Manual (2010)

See Caltrans 2010 Standard Plans A10F, A10G and A10H for Soil and Rock Legends.

All dimensions are in feet unless otherwise shown.

Base map is provided by Biggs Cardosa Associates Inc 2016.

DIST	COUNTY	ROUTE	POST MILES TOTAL PROJECT	SHEET No	TOTAL SHEETS
6	FR	LOCAL			

GEOTECHNICAL PROFESSIONAL DATE 1/8/16

PLANS APPROVAL DATE

The County of Fresno or its officers or agents shall not be responsible for the accuracy or completeness of electronic copies of this plan sheet.

REGISTERED PROFESSIONAL ENGINEER GARY PARIKH No. G.E. 666 Exp. 12/31/17 GEOTECHNICAL STATE OF CALIFORNIA

PARIKH CONSULTANTS, INC.
2360 QUME DRIVE, SUITE A
SAN JOSE, CA 95131

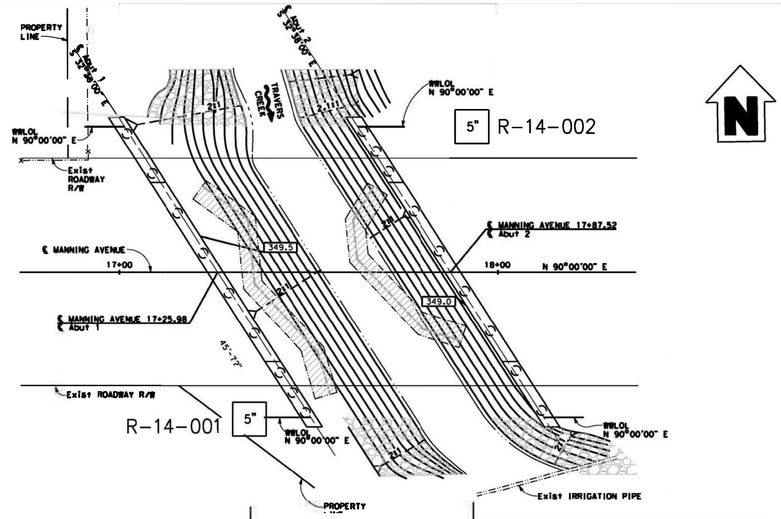

PLAN
1"=20'

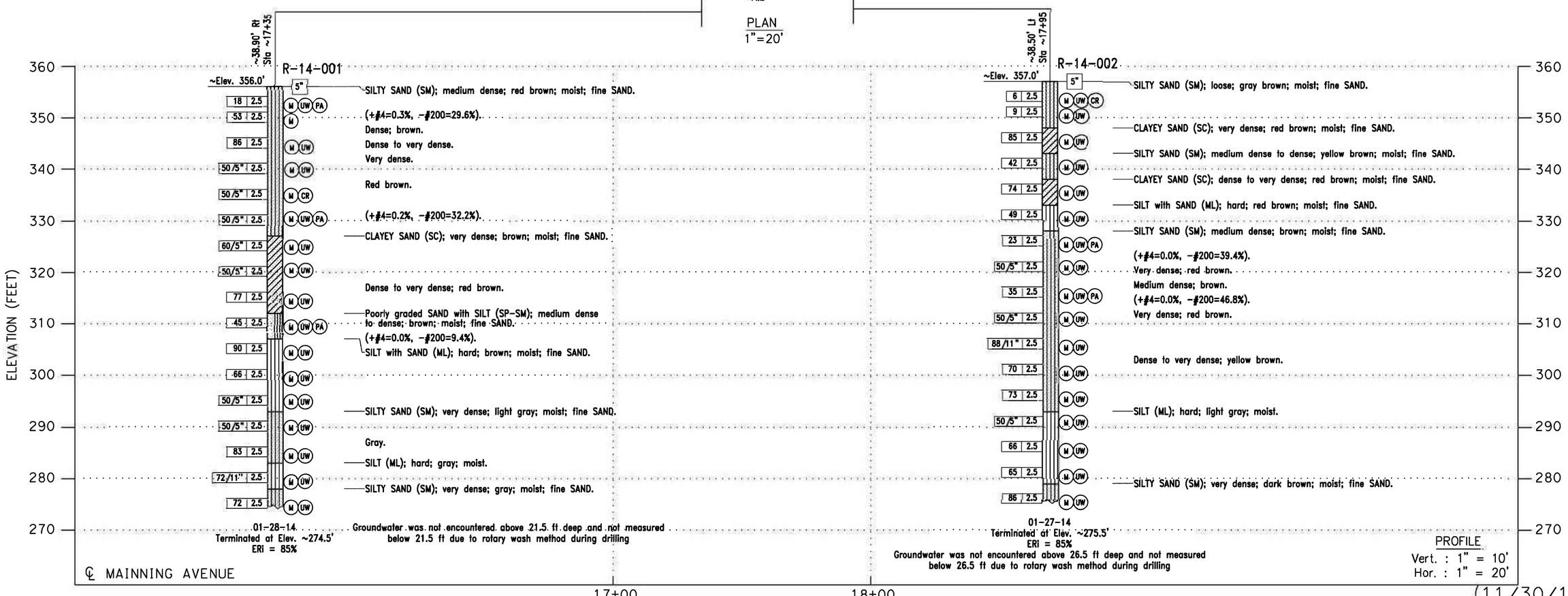

PROFILE
Vert. : 1" = 10'
Hor. : 1" = 20'

(11/30/15)

	DATE	RECORD DRAWING	
DESIGNED: F. CASIMIRO	7/6/26	RESIDENT ENGINEER	DATE
DRAWN: E. CISNEROS	7/6/26		
CHECKED: T. DUBOVIK	7/6/26		

FOR RIGHT OF WAY DATA AND ACCURATE ACCESS DETERMINATION, SEE DOCUMENTS IN THE DEPARTMENT OF PUBLIC WORKS AND PLANNING.

SCALE: AS SHOWN

REGISTERED PROFESSIONAL ENGINEER MICHAEL A. PUCCI No. C 47710 Exp. 03/31/26 CIVIL STATE OF CALIFORNIA

Dewberry
DEWBERRY ENGINEERING INC.
11060 WHITE ROCK ROAD SUITE 200
RANCHO CORDOVA, CA 95670

PROJECT: TRAVERS CREEK BRIDGE ON MANNING AVENUE
ROAD NO. S0900 BRIDGE NO. 42C-0687

THE COUNTY OF FRESNO 1856

DEPARTMENT OF PUBLIC WORKS AND PLANNING

LOG OF TEST BORINGS

DRAWING NO. 11256 SHEET NO. ST-21 TOTAL 62

FILE => U:\13017 - Manning Avenue over Travers Creek Bridge - sub BCA\400 Project Design Files\430 Bridges & Structures\Plans\TC-S-LOTB.dwg